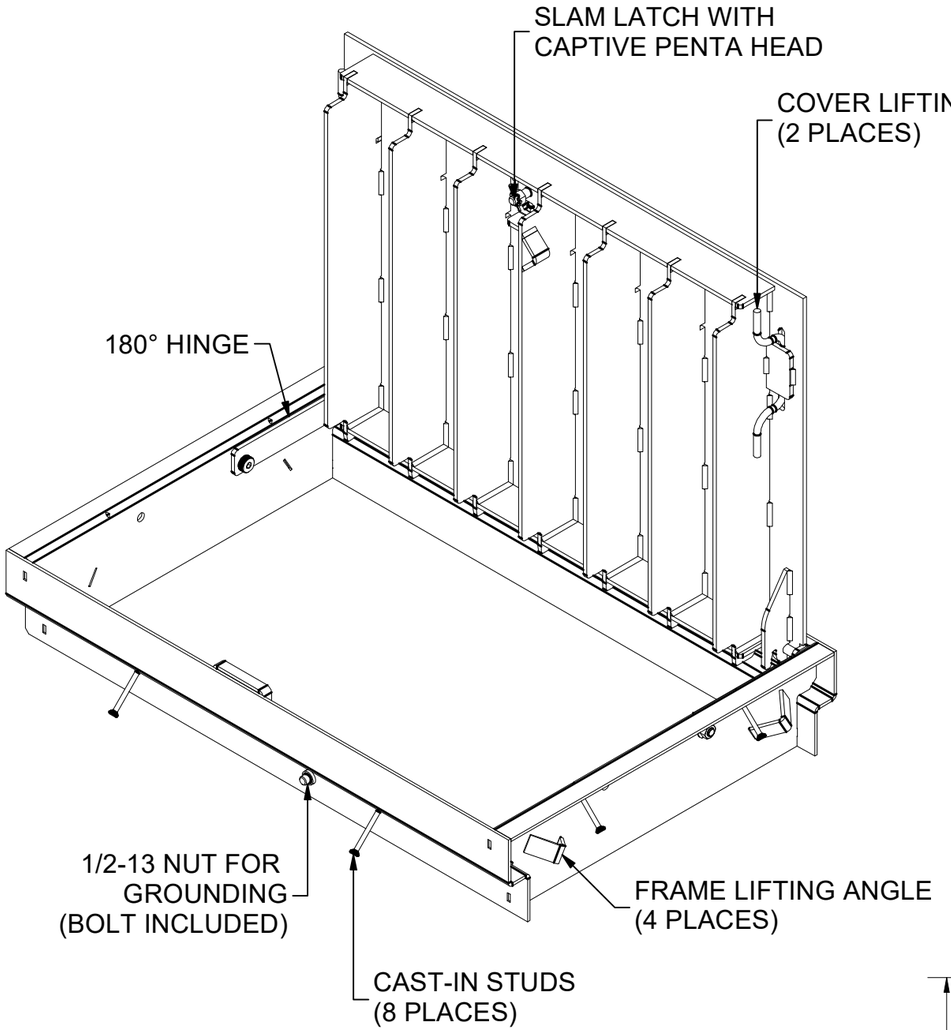

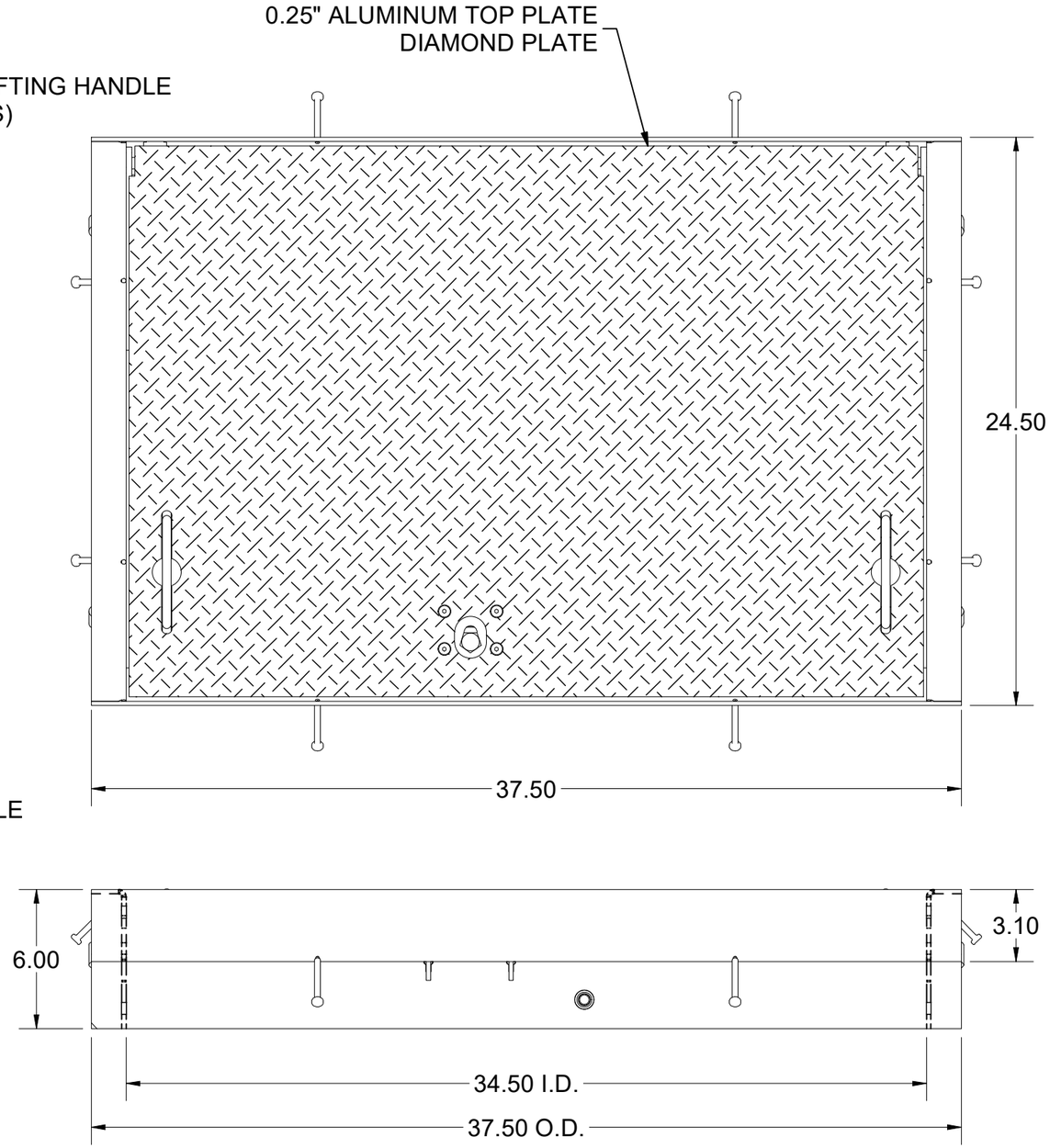

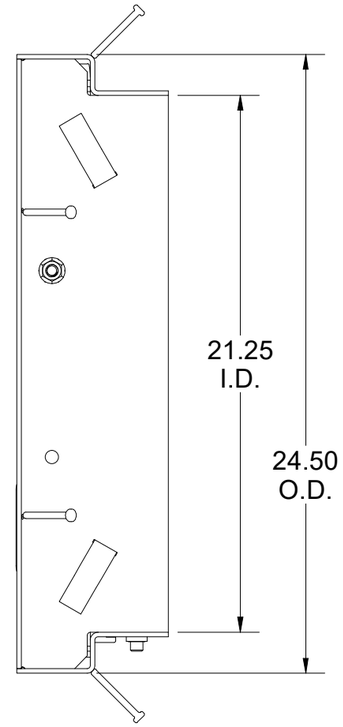

200079791.idw

NOTES:
1. ALUMINUM DOOR, HOT DIPPED GALVANIZED FRAME
2. STAINLESS STEEL HINGES
3. HARDWARE CONTACTING DOOR IS STAINLESS

LOADING CRITERIA: ASTM C1802 Load Level 04

16,000 lb load on 10" x 20" footprint, without impact restricted to parking spaces and areas within close proximity of roadways.

SURFACE:	Diamond Plate	FINISH:	Galvanized
WEIGHT:	92.75 lbs	MARKING:	None

Infrastructure
JENSEN
527 Dunn Circle, Sparks, NV 89431
775-352-2716 FAX: 755-358-8127
JENSENMETALTECH.COM

©2025 Jensen Infrastructure - All rights reserved.
All materials appearing as Jensen Infrastructure documents and the like are proprietary work product and are protected under U.S. copyright and other laws. Unless in conjunction with business conducted with Jensen Infrastructure , any use of Jensen Infrastructure work product without express, written consent is prohibited, and recipient is prohibited from distributing any and all work product to non-approved third parties under penalty of civil action.
This product shall only be produced in a Jensen Infrastructure facility.

DESCRIPTION:	CAB1-2436-CHF4-DP-G-BD-SL-OH06 24x36 Standard Cover Assembly (Loading Criteria Per ASTM C1802 Load Level 04, Bi-Metal, Hinged, Full Range, Handle (2 Per Door), Diamond Plate, Galvanized, Slam Latch) 06	REV:	C-1
PART NUMBER:	200079791	DRAWN BY:	M. Newman
CREATED:	9/7/2023	MODIFIED:	5/7/2025
		SHEET:	1

BILL OF MATERIALS

ITEM	ITEM QTY	QTY	PART NUMBER	DESCRIPTION	PART NAME
1		1	200080266	FAS-2436-CHF4-R-OH06	200080266
2	1	1	200101028	Slam Latch Base Weldment, Aluminum	200101028
2		1	200080265	DAA1-SD-2436-HF4-DP-R-BD-SL	200080265
4	1	1	200084010	RIGHT HINGE ASSEMBLY PNW STYLE, SS	200084010
5	1	1	200084011	LEFT HINGE ASSEMBLY PNW STYLE, SS	200084011
6	2	2	100040099	Alloy Steel Shoulder Screw, 5/8" Shoulder Diameter, 5/16" Shoulder Length, 1/2"-13 Thread	100040099
7	2	2	100026256	LOW-STRENGTH STEEL FLANGE NUT, 1/2" - 13 THREAD SIZE	100026256
8	4	4	100017209	BOLT SOCKET FLAT COUNTERSUNK HEAD - 1/4-20 UNC - 1.25 - 316SS	100017209
9	5	5	100007498	HEX NUT NYLOCK - 1/4-20 UNC - 304SS	100007498
10	1	1	100003484	Hex Bolt 1/2-13 UNC ZINC - FT - 0.75"	100003484
11	1	1	200084519	1/2" THK Cam Latch 304SS	200084519
12	1	1	100007915	SPRING COMPRESSION 055 X 5/8 X 7/8 LONG	100007915
13	1	1	100007749	BOLT PENTA 1/2-13 UNC 0.875 HEAD 2.25L SS DRILLED	100007749
14	1	1	100004002	Hex Bolt 5/16-18 UNC 316SS - PT - 2"	100004002
15	1	1	100007729	HEX NUT SLOTTED CASTLE HEAD 1/2-13 SS	100007729
16	1	1	100007918	COTTER PIN 0.094DIA X 1-1/4	100007918
17	1	0.165 lbmass	100007804	Slam Latch Spacer Plate - 1/4" Thick, Aluminum	200101034

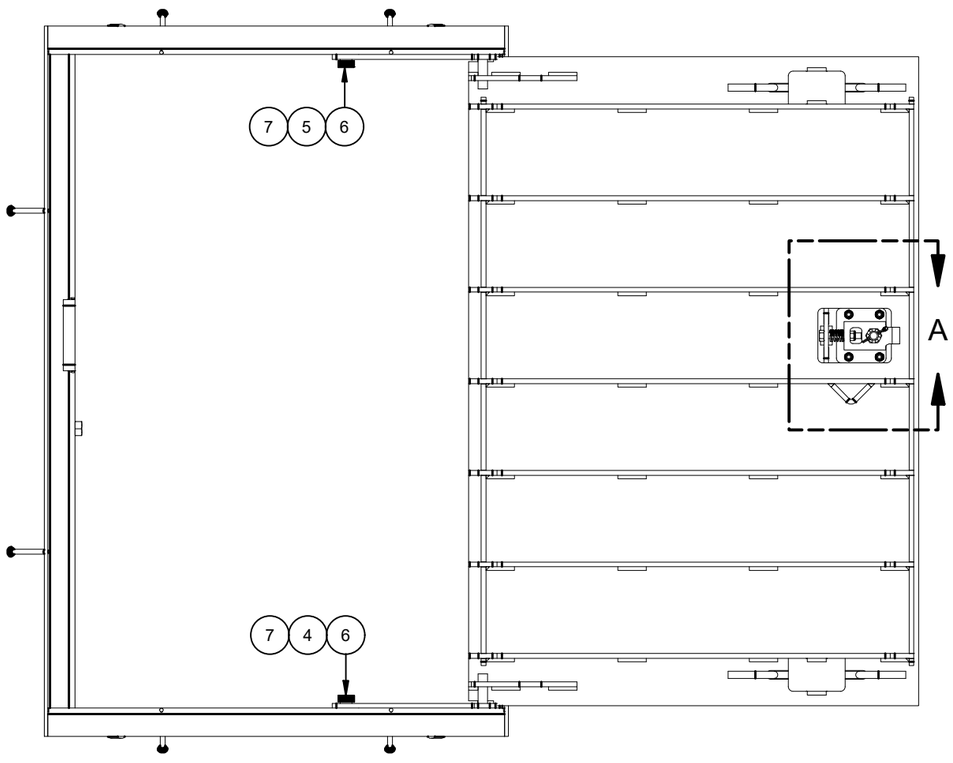

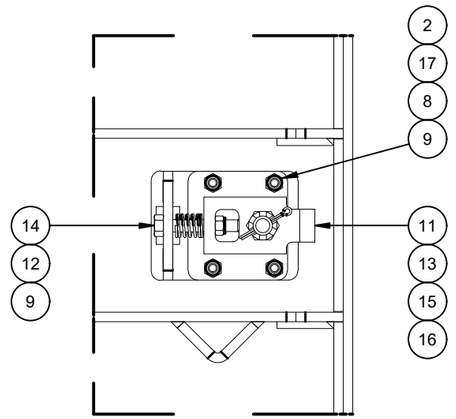

DETAIL A
SCALE 1 / 4

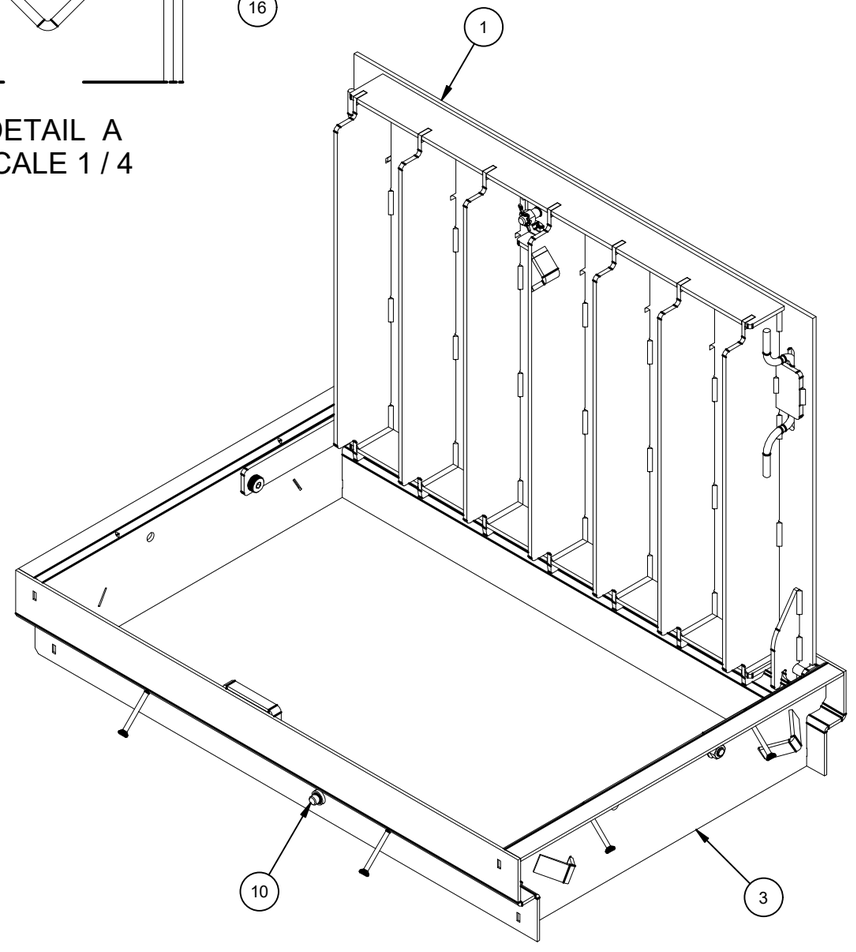

200079791.idw

REVISION HISTORY	
DESCRIPTION	DATE
SHIFTED SLAM LATCH LOCATION TO CENTER BETWEEN STIFFENERS	12/4/2023
ADDED GROUNDING NUT AND MADE HINGE FLUSH WITH TOP PLATE	12/8/2023
SHIFTED SLAM LATCH LOCATION PER SHOP REQUEST, MOVED 1/4" ADDITIONAL AWAY FROM SIDEBAR, ERM 57760-2	10/1/2024
PER ECR 58890-1: INSET DOOR 0.1", REDESIGNED HINGES FOR Ø 1/2" BAR, CHANGED TO IN HOUSE SLAM LATCH	5/7/2025

MATERIAL FINISH: Galvanized

MATERIAL SURFACE: Diamond Plate

Infrastructure JENSEN

527 Dunn Circle, Sparks, NV 89431
775-352-2716 FAX: 755-358-8127
JENSENMETALTECH.COM

©2025 Jensen Infrastructure - All rights reserved.
All materials appearing as Jensen Infrastructure documents and the like are proprietary work product and are protected under U.S. copyright and other laws.
Unless in conjunction with business conducted with Jensen Infrastructure , any use of Jensen Infrastructure work product without express, written consent is prohibited, and recipient is prohibited from distributing any and all work product to non-approved third parties under penalty of civil action.
This product shall only be produced in a Jensen Infrastructure facility.

PART NUMBER & DESCRIPTION: 200079791
CAB1-2436-CHF4-DP-G-BD-SL-OH06

REV: C-1

WEIGHT: 92.75 Lbs

DRAWN BY: M. Newman

CREATED: 9/7/2023

MODIFIED: 5/7/2025

SHEET: 2

BILL OF MATERIALS

ITEM	UNIT QTY	QTY	PART NUMBER	DESCRIPTION	PART NAME
1	20.648 lbmass	20.670 lbmass	100007808	Door Component Aluminum Plate, Top	200080273
2	1.846 lbmass	3.692 lbmass	100007804	Door Component Aluminum Side Bar	200080272
3	2.161 lbmass	15.130 lbmass	100007804	Door Component Aluminum Stiffener, Plate	200080274
4	0.192 lbmass	0.385 lbmass	100007804	Door Component Hinge, Aluminum	200080300
5	0.129 lbmass	0.259 lbmass	100007804	HANDLE RETAINER ALUMINUM	200079449
6	1	2	100007645	LEAF PULL HANDLE 3/8IN DIA SST	100007645
7	1	1	100007642	LIFTING BRACKET ALU LEAF	100007642

ALL WELDS TO USE 5356 WELD WIRE

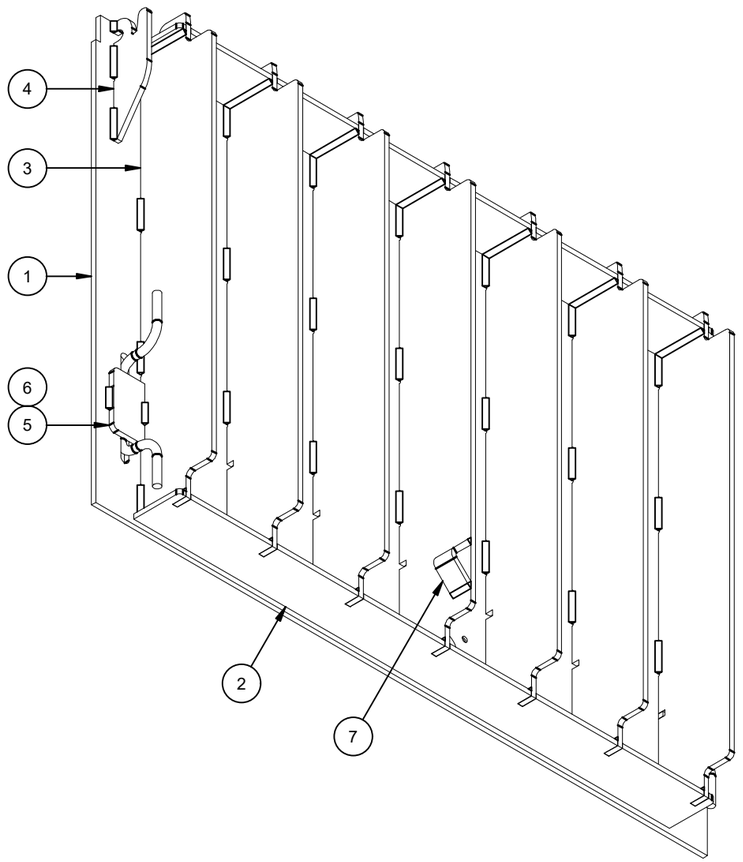

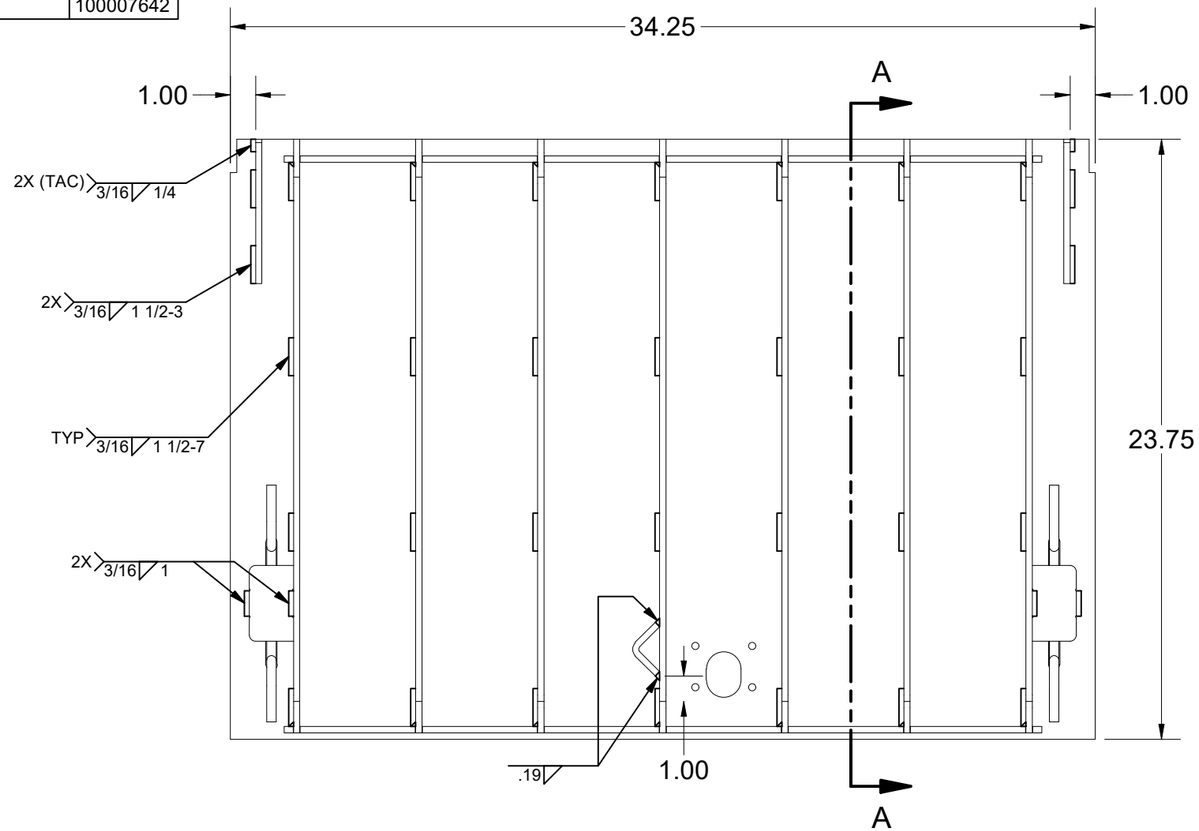

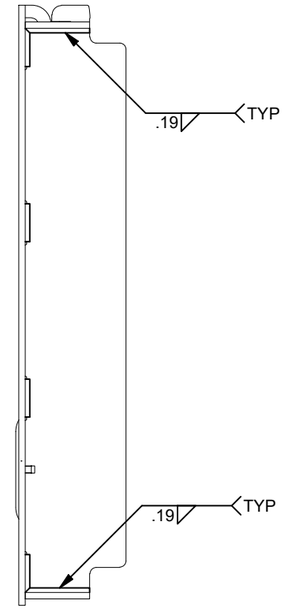

SECTION A-A

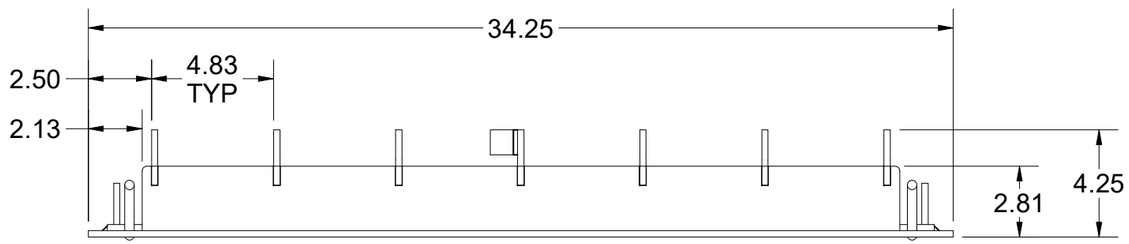

MATERIAL FINISH: Raw	Infrastructure JENSEN 527 Dunn Circle, Sparks, NV 89431 775-352-2716 FAX: 755-358-8127 *JENSENMETALTECH.COM*	©2025 Jensen Infrastructure - All rights reserved. All materials appearing as Jensen Infrastructure documents and the like are proprietary work product and are protected under U.S. copyright and other laws. Unless in conjunction with business conducted with Jensen Infrastructure , any use of Jensen Infrastructure work product without express, written consent is prohibited, and recipient is prohibited from distributing any and all work product to non-approved third parties under penalty of civil action. This product shall only be produced in a Jensen Infrastructure facility.	PART NUMBER & DESCRIPTION: 200080265 DAA1-SD-2436-HF4-DP-R-BD-SL	REV: C-1
MATERIAL SURFACE: Diamond Plate			WEIGHT: 41.08 Lbs CREATED: 9/7/2023	DRAWN BY: M. Newman MODIFIED: 5/7/2025	SHEET: 3

200079791.idw

BILL OF MATERIALS

ITEM	ITEM QTY	QTY	PART NUMBER	DESCRIPTION	PART NAME
1	1	14.375 lbmass	100007734	Frame Component Steel Frame Front, Cast In	200080268
2	1	14.411 lbmass	100007734	Frame Component Steel Frame End, Cast In	200080270
3	2	17.457 lbmass	100007734	Frame Component Steel Frame Side, Cast In	200080269
4	1	0.295 lbmass	100007734	U-SHAPE SLAM LATCH HOOK 3.5" TALL FRAME	200080332
5	2	0.127 lbmass	100007734	Frame Component- Door Hinge Hook	200084007
6	8	8	100007895	STUD NELSON WELD H4L-HEADED A36 1/4X2-11/16	100007895
7	4	4	100007641	FRAME LIFTING BRACKET	100007641
8	1	1	100007728	NUT SELF-CLINCH 1/2-13 S-0813-1 RAW	100007728

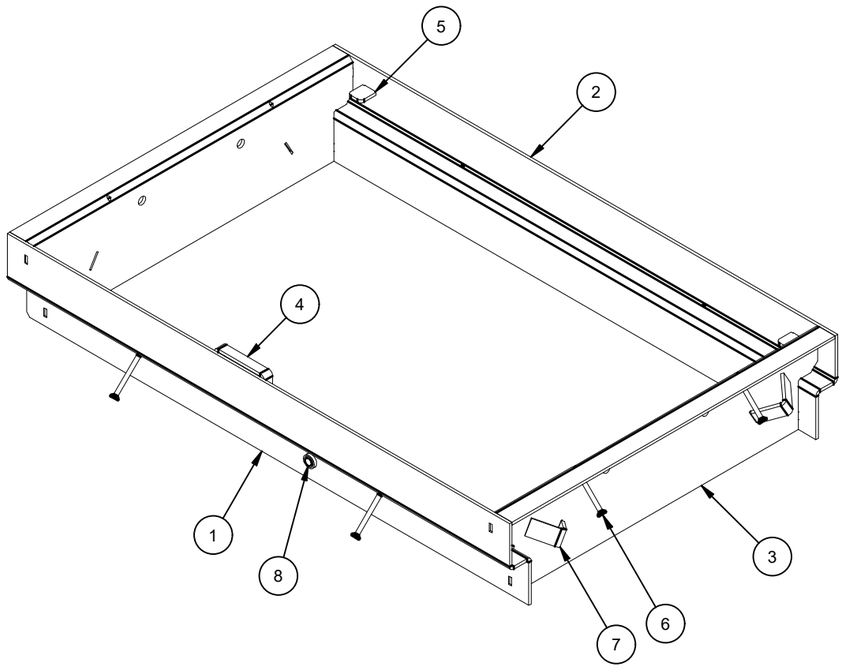

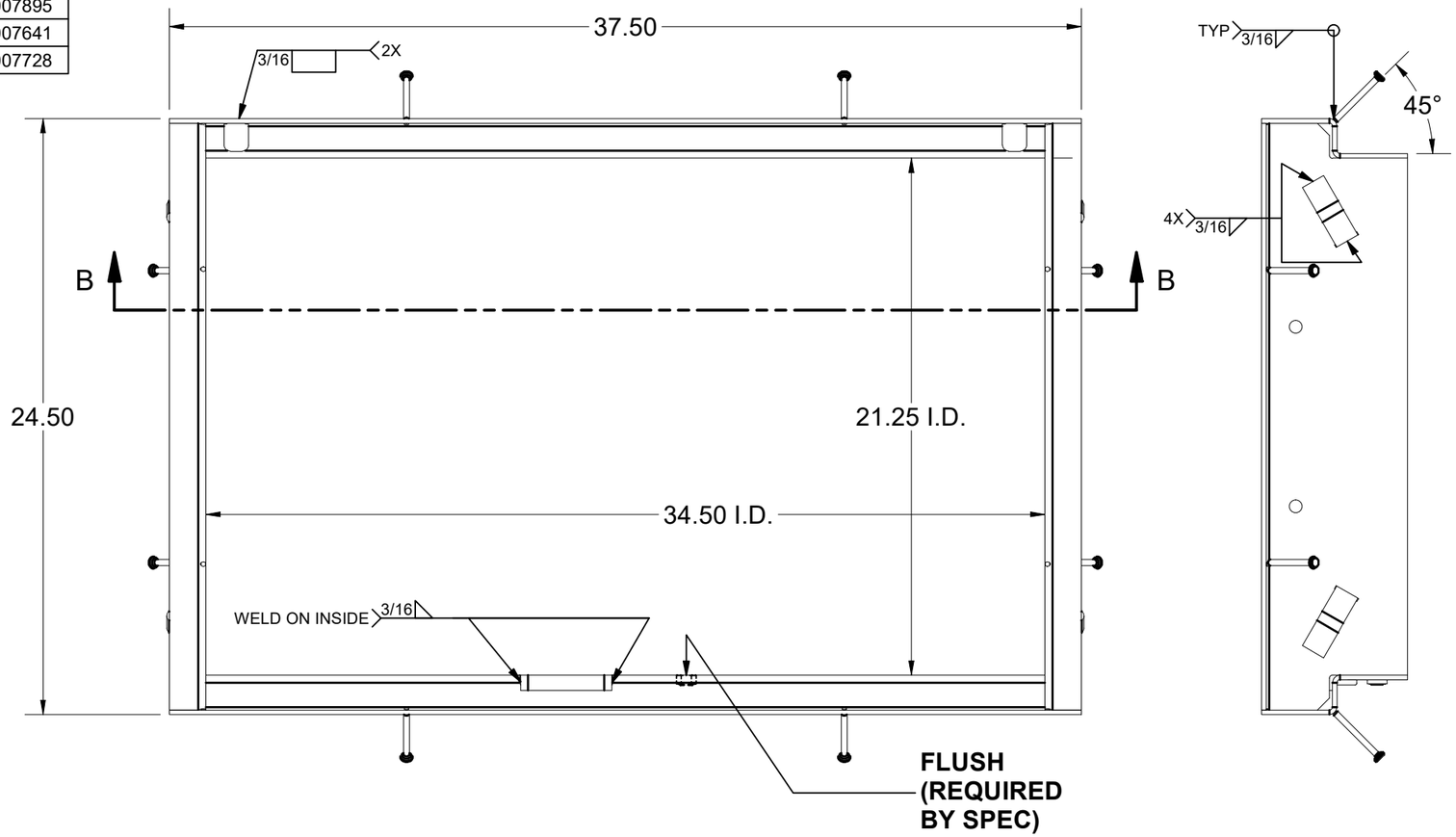

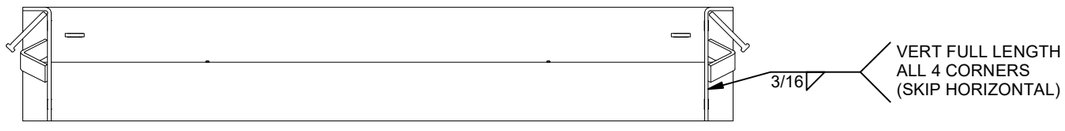

SECTION B-B
SCALE 1/8

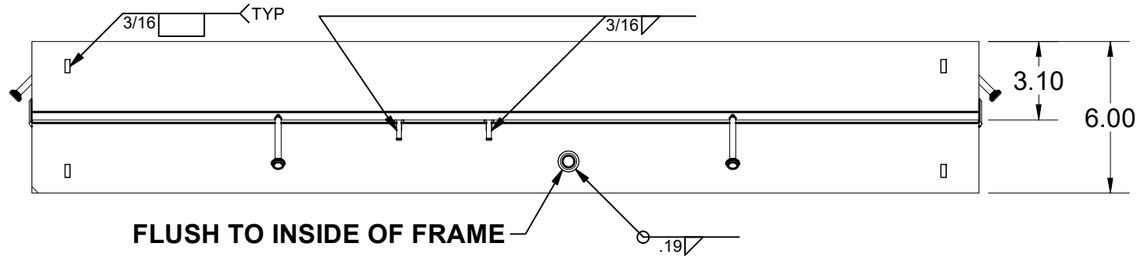

MATERIAL FINISH: Raw	Infrastructure JENSEN 527 Dunn Circle, Sparks, NV 89431 775-352-2716 FAX: 755-358-8127 *JENSENMETALTECH.COM*	©2025 Jensen Infrastructure - All rights reserved. All materials appearing as Jensen Infrastructure documents and the like are proprietary work product and are protected under U.S. copyright and other laws. Unless in conjunction with business conducted with Jensen Infrastructure , any use of Jensen Infrastructure work product without express, written consent is prohibited, and recipient is prohibited from distributing any and all work product to non-approved third parties under penalty of civil action. This product shall only be produced in a Jensen Infrastructure facility.	PART NUMBER & DESCRIPTION: 200080266 FAS-2436-CHF4-R-OH06 — REV: C-1
MATERIAL SURFACE: Smooth			WEIGHT: 47.86 Lbs — DRAWN BY: M. Newman — SHEET: 4
			CREATED: 9/7/2023 — MODIFIED: 5/7/2025

200079791.idw

BILL OF MATERIALS

ITEM	ITEM QTY	QTY	PART NUMBER	DESCRIPTION	PART NAME
1	1	0.231 lbmass	100007804	Slam Latch Retainer Base Plate, Aluminum	200101000
2	1	0.075 lbmass	100007804	Slam Latch Retainer Flange Plate, Aluminum	200101027

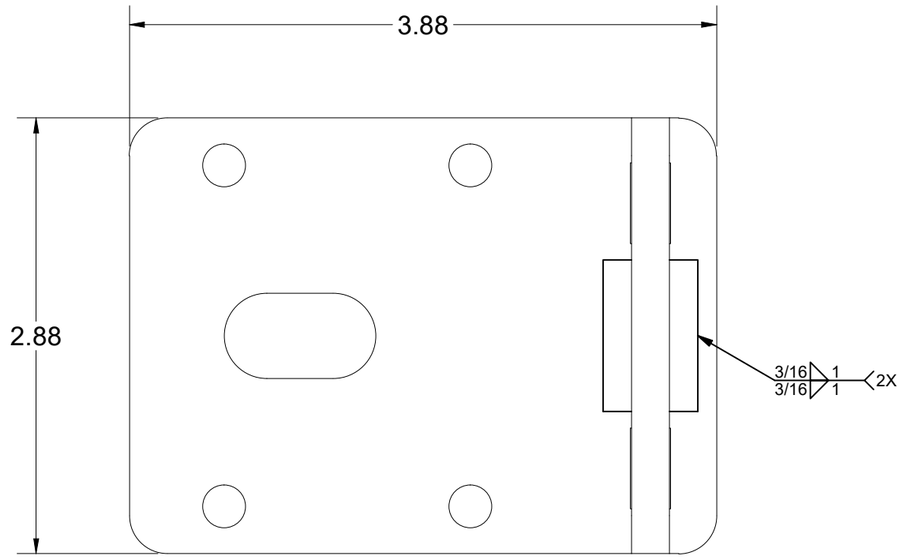

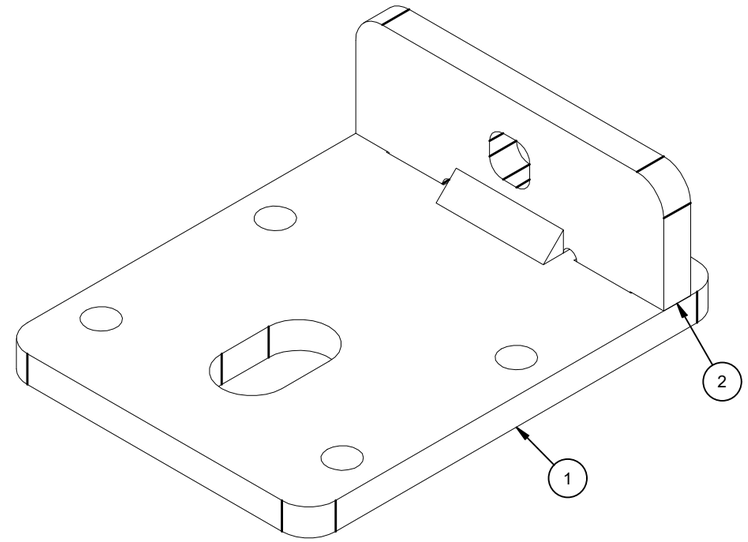

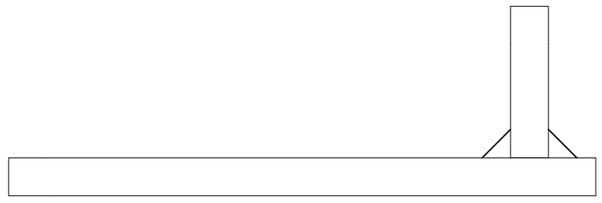

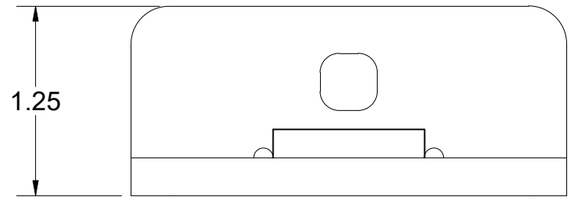

200079791.idw

MATERIAL FINISH: Raw

MATERIAL SURFACE: Smooth

Infrastructure
JENSEN

527 Dunn Circle, Sparks, NV 89431
775-352-2716 FAX: 755-358-8127
JENSENMETALTECH.COM

©2025 Jensen Infrastructure - All rights reserved.
All materials appearing as Jensen Infrastructure documents and the like are proprietary work product and are protected under U.S. copyright and other laws.
Unless in conjunction with business conducted with Jensen Infrastructure , any use of Jensen Infrastructure work product without express, written consent is prohibited, and recipient is prohibited from distributing any and all work product to non-approved third parties under penalty of civil action.
This product shall only be produced in a Jensen Infrastructure facility.

PART NUMBER & DESCRIPTION: 200101028 Slam Latch Base Weldment, Aluminum

REV: C-1

WEIGHT: 0.32 Lbs

DRAWN BY: M. Newman

CREATED: 9/7/2023

MODIFIED: 5/7/2025

SHEET: 5

BILL OF MATERIALS

ITEM	ITEM QTY	QTY	PART NUMBER	DESCRIPTION	PART NAME
1	1	0.953 lbmass	100007948	HINGE PLATE PNW STYLE, SS	200084012
2	1	1.750 in	100028099	STRUCTURAL ROUND BAR 304SS 1/2	100028099

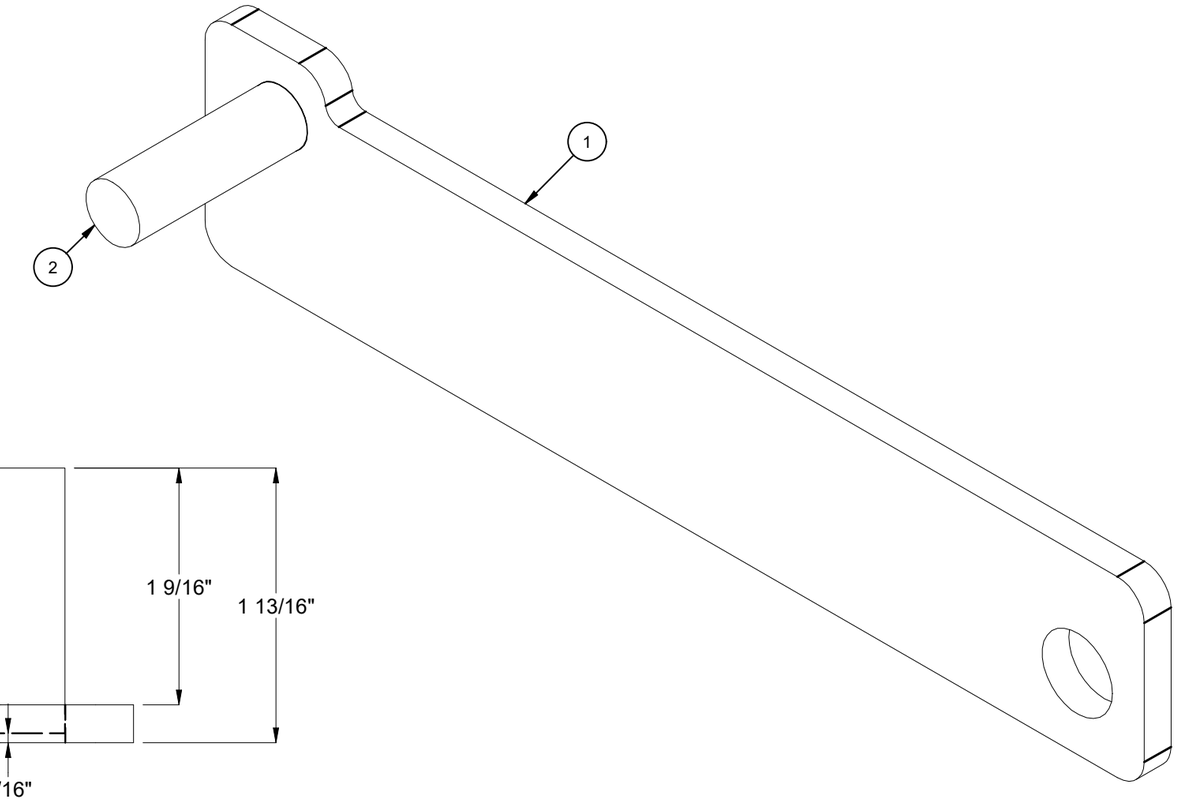

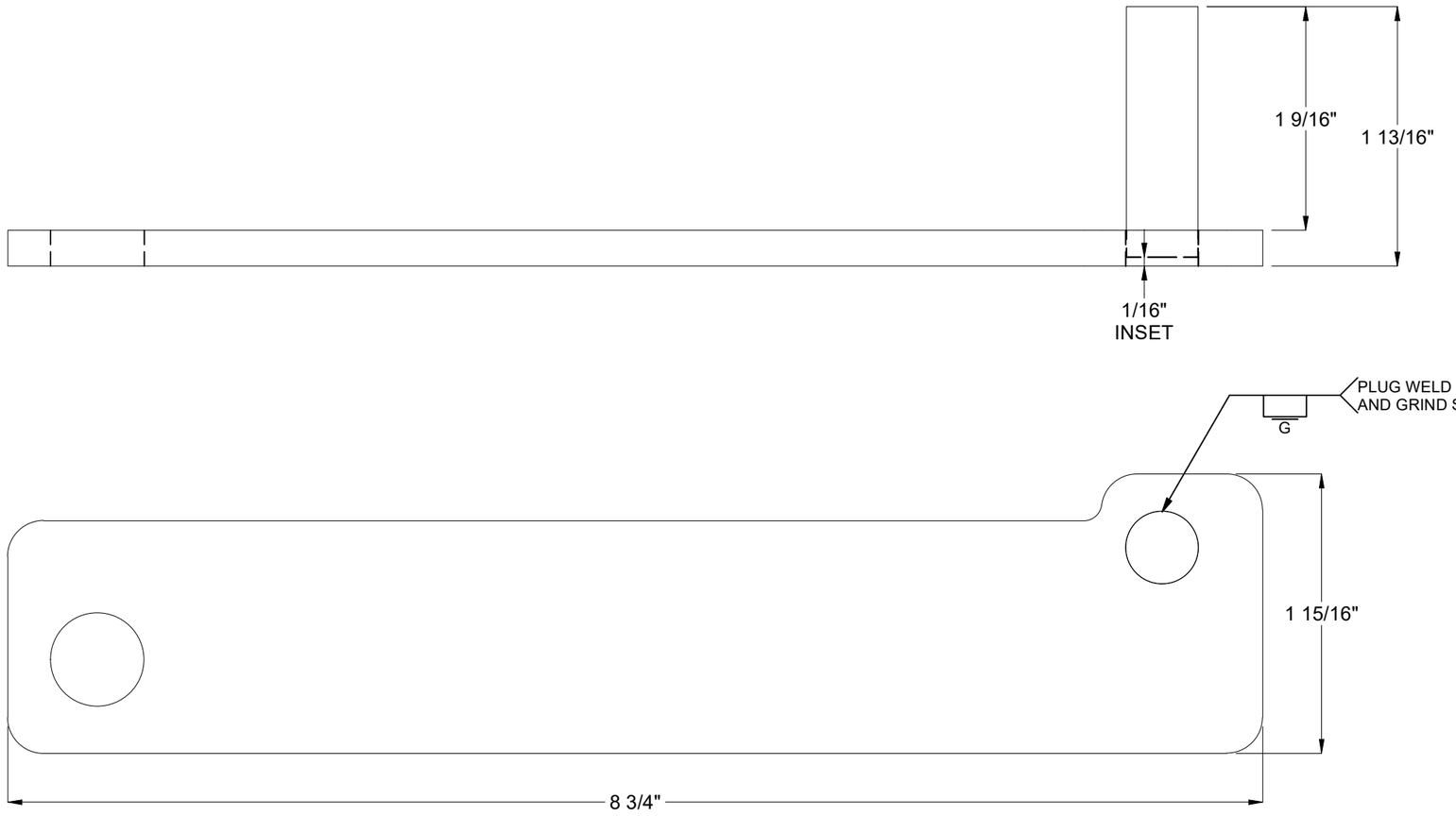

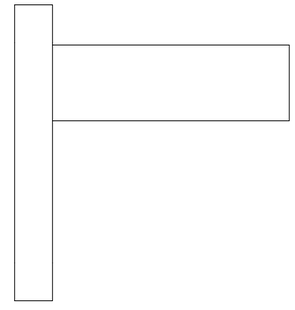

200079791.idw

MATERIAL FINISH:		PART NUMBER & DESCRIPTION: 200084010 RIGHT HINGE ASSEMBLY PNW STYLE, SS	REV: C-1
MATERIAL SURFACE:		WEIGHT: 1.12 Lbs	DRAWN BY: M. Newman
		CREATED: 9/7/2023	MODIFIED: 5/7/2025
			SHEET: 6

Infrastructure
JENSEN
527 Dunn Circle, Sparks, NV 89431
775-352-2716 FAX: 755-358-8127
JENSENMETALTECH.COM

©2025 Jensen Infrastructure - All rights reserved.
All materials appearing as Jensen Infrastructure documents and the like are proprietary work product and are protected under U.S. copyright and other laws. Unless in conjunction with business conducted with Jensen Infrastructure , any use of Jensen Infrastructure work product without express, written consent is prohibited, and recipient is prohibited from distributing any and all work product to non-approved third parties under penalty of civil action.
This product shall only be produced in a Jensen Infrastructure facility.

BILL OF MATERIALS

ITEM	ITEM QTY	QTY	PART NUMBER	DESCRIPTION	PART NAME
1	1	0.953 lbmass	100007948	HINGE PLATE PNW STYLE, SS	200084012
2	1	1.750 in	100028099	STRUCTURAL ROUND BAR 304SS 1/2	100028099

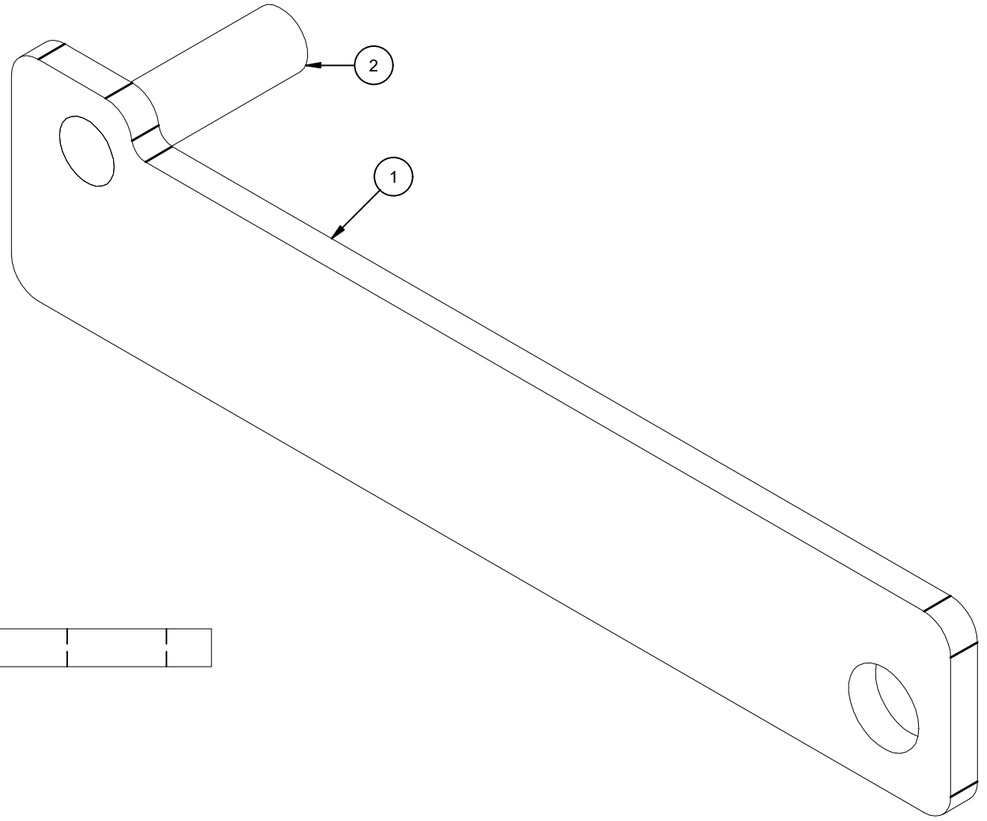

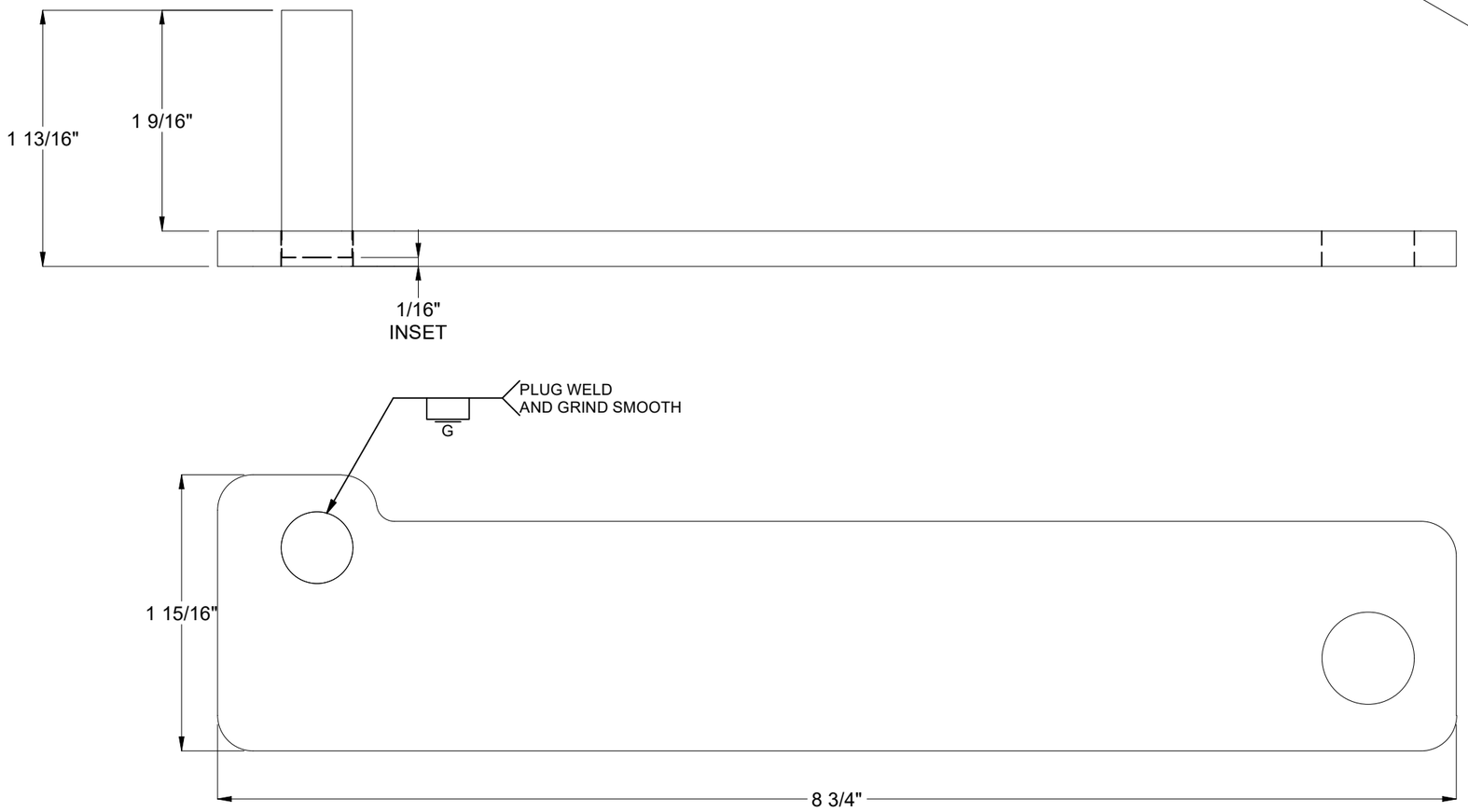

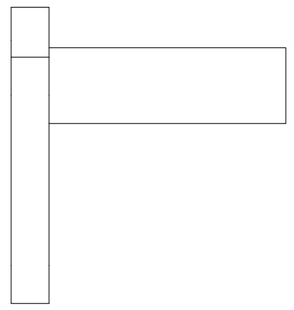

200079791.idw

MATERIAL FINISH:		PART NUMBER & DESCRIPTION: 200084011 LEFT HINGE ASSEMBLY PNW STYLE, SS	REV: C-1
MATERIAL SURFACE:		WEIGHT: 1.12 Lbs	DRAWN BY: M. Newman
		CREATED: 9/7/2023	MODIFIED: 5/7/2025
			SHEET: 7

Infrastructure
JENSEN
527 Dunn Circle, Sparks, NV 89431
775-352-2716 FAX: 755-358-8127
JENSENMETALTECH.COM

©2025 Jensen Infrastructure - All rights reserved.
All materials appearing as Jensen Infrastructure documents and the like are proprietary work product and are protected under U.S. copyright and other laws. Unless in conjunction with business conducted with Jensen Infrastructure , any use of Jensen Infrastructure work product without express, written consent is prohibited, and recipient is prohibited from distributing any and all work product to non-approved third parties under penalty of civil action.
This product shall only be produced in a Jensen Infrastructure facility.

BURN LIST - BOM

PART NAME	ITEM QTY	QTY	DESCRIPTION	STOCK NUMBER	MATERIAL	MASS	SHEET
200079449	2	0.259 lbmass	HANDLE RETAINER ALUMINUM	100007804	SHT ALUM ASTM 6061 SM-RAW 60W .25	0.129 lbmass	10
200080268	1	14.375 lbmass	Frame Component Steel Frame Front, Cast In	100007734	STL ASTM A36 SM-HRPO 60X120 RAW .1875	14.375 lbmass	11
200080269	2	17.457 lbmass	Frame Component Steel Frame Side, Cast In	100007734	STL ASTM A36 SM-HRPO 60X120 RAW .1875	8.728 lbmass	12
200080270	1	14.411 lbmass	Frame Component Steel Frame End, Cast In	100007734	STL ASTM A36 SM-HRPO 60X120 RAW .1875	14.411 lbmass	13
200080272	2	3.692 lbmass	Door Component Aluminum Side Bar	100007804	SHT ALUM ASTM 6061 SM-RAW 60W .25	1.846 lbmass	14
200080273	1	20.648 lbmass	Door Component Aluminum Plate, Top	100007808	SHT ALUM ASTM 6061 DP RAW .25	20.648 lbmass	15
200080274	7	15.130 lbmass	Door Component Aluminum Stiffener, Plate	100007804	SHT ALUM ASTM 6061 SM-RAW 60W .25	2.161 lbmass	16
200080300	2	0.385 lbmass	Door Component Hinge, Aluminum	100007804	SHT ALUM ASTM 6061 SM-RAW 60W .25	0.192 lbmass	17
200080332	1	0.295 lbmass	U-SHAPE SLAM LATCH HOOK 3.5" TALL FRAME	100007734	STL ASTM A36 SM-HRPO 60X120 RAW .1875	0.295 lbmass	18
200084007	2	0.127 lbmass	Frame Component- Door Hinge Hook	100007734	STL ASTM A36 SM-HRPO 60X120 RAW .1875	0.063 lbmass	19
200084012	2	2.025 lbmass	HINGE PLATE PNW STYLE, SS	100007948	SHT STL 60 X 120 X .25 316SS	1.012 lbmass	20
200101000	1	0.247 lbmass	Slam Latch Retainer Base Plate, Aluminum	100007804	SHT ALUM ASTM 6061 SM-RAW 60W .25	0.247 lbmass	21
200101027	1	0.072 lbmass	Slam Latch Retainer Flange Plate, Aluminum	100007804	SHT ALUM ASTM 6061 SM-RAW 60W .25	0.072 lbmass	22
200101034	1	0.165 lbmass	Slam Latch Spacer Plate - 1/4" Thick, Aluminum	100007804	SHT ALUM ASTM 6061 SM-RAW 60W .25	0.165 lbmass	23

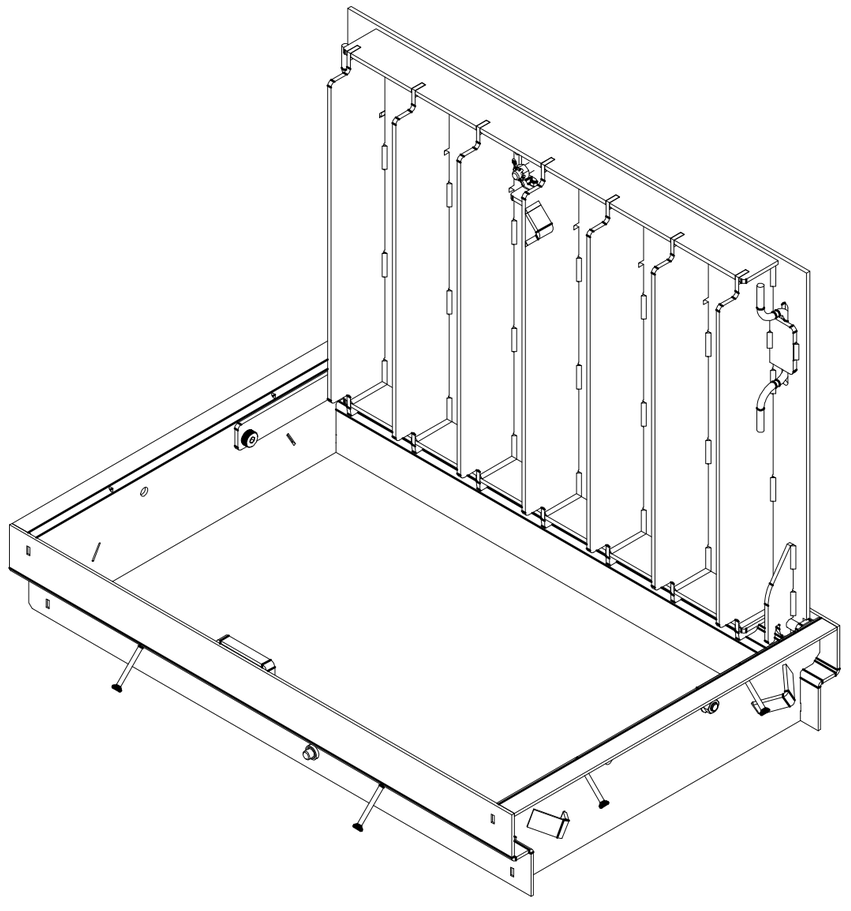

200079791.idw

MATERIAL FINISH: Galvanized

MATERIAL SURFACE: Diamond Plate

Infrastructure JENSEN

527 Dunn Circle, Sparks, NV 89431
775-352-2716 FAX: 755-358-8127
JENSENMETALTECH.COM

©2025 Jensen Infrastructure - All rights reserved.
All materials appearing as Jensen Infrastructure documents and the like are proprietary work product and are protected under U.S. copyright and other laws. Unless in conjunction with business conducted with Jensen Infrastructure , any use of Jensen Infrastructure work product without express, written consent is prohibited, and recipient is prohibited from distributing any and all work product to non-approved third parties under penalty of civil action.
This product shall only be produced in a Jensen Infrastructure facility.

PART NUMBER & DESCRIPTION: 200079791 CAB1-2436-CHF4-DP-G-BD-SL-OH06

REV: C-1

WEIGHT: 92.75 Lbs

DRAWN BY: M. Newman

CREATED: 9/7/2023

MODIFIED: 5/7/2025

SHEET: 8

CUT LIST - BOM

PART NAME	ITEM QTY	BASE QTY	QTY	DESCRIPTION	PART NUMBER	MASS	SHEET
100028099	2	1.7500 in	3.500 in	STRUCTURAL ROUND BAR 304SS 1/2	100028099	0.0993 lbmass	

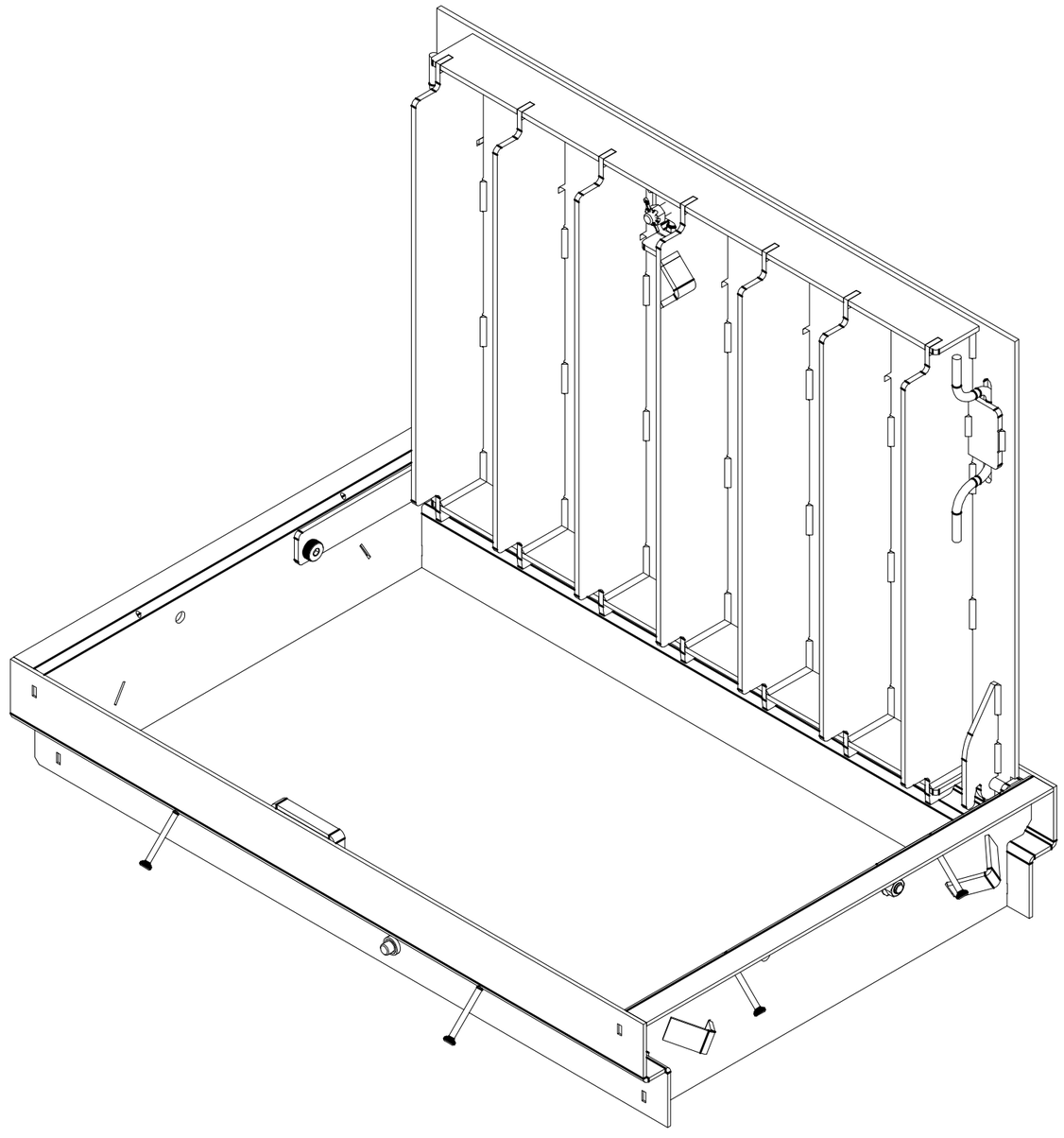

200079791.idw

MATERIAL FINISH:
Galvanized

MATERIAL SURFACE:
Diamond Plate

Infrastructure
JENSEN
527 Dunn Circle, Sparks, NV 89431
775-352-2716 FAX: 755-358-8127
JENSENMETALTECH.COM

©2025 Jensen Infrastructure - All rights reserved.
All materials appearing as Jensen Infrastructure documents and the like are proprietary work product and are protected under U.S. copyright and other laws. Unless in conjunction with business conducted with Jensen Infrastructure , any use of Jensen Infrastructure work product without express, written consent is prohibited, and recipient is prohibited from distributing any and all work product to non-approved third parties under penalty of civil action.
This product shall only be produced in a Jensen Infrastructure facility.

PART NUMBER & DESCRIPTION: 200079791
CAB1-2436-CHF4-DP-G-BD-SL-OH06

REV: C-1

WEIGHT: 92.75 Lbs

DRAWN BY: M. Newman

CREATED: 9/7/2023

MODIFIED: 5/7/2025

SHEET: 9

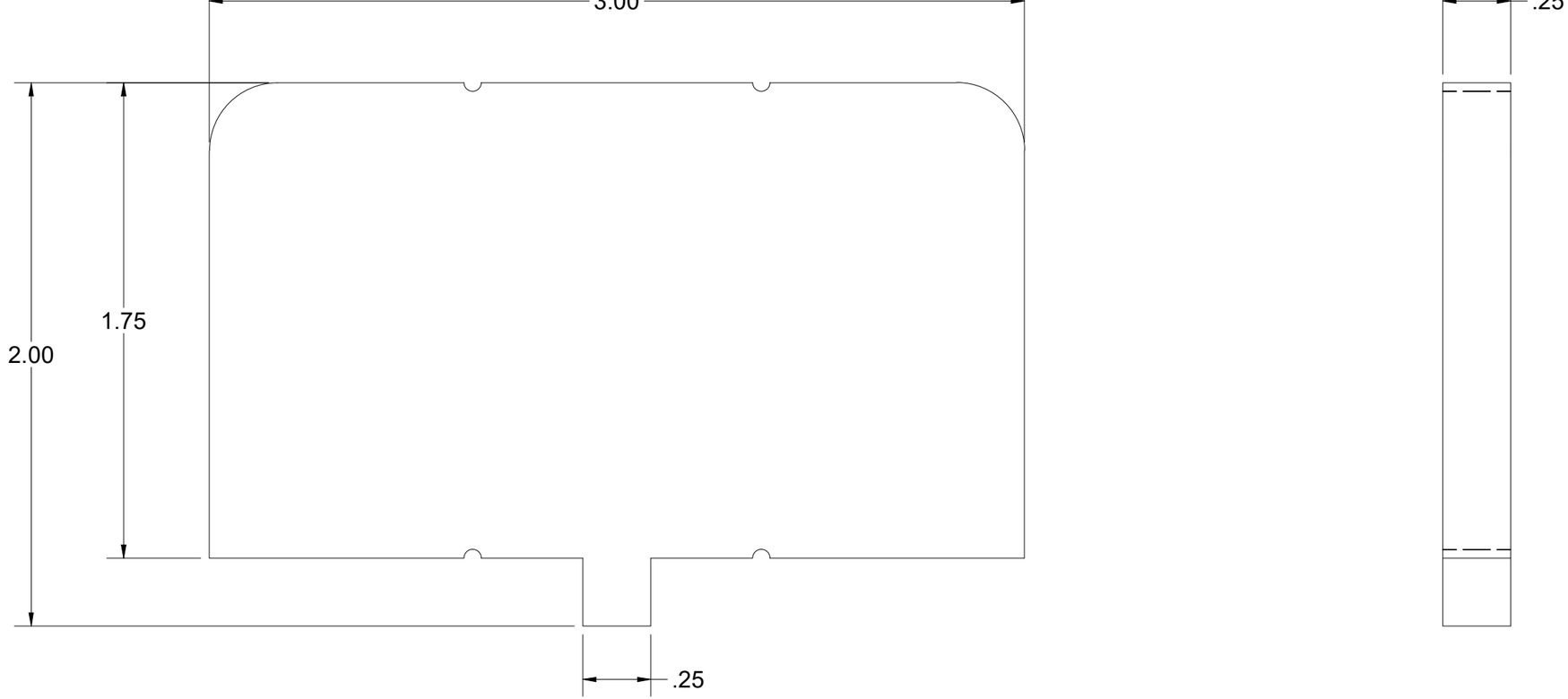

BEND TABLE				MATERIAL IFS: 100007804
BEND RADIUS	V-OPENING	BEND ANGLE	BEND DEDUCTION	MATERIAL THK: 0.25
-	-	-	-	MAT DESCRIPTION: SHT ALUM ASTM 6061 SM-RAW 60W .25

Infrastructure
JENSEN
527 Dunn Circle, Sparks, NV 89431
775-352-2716 FAX: 755-358-8127
JENSENMETALTECH.COM

©2025 Jensen Infrastructure - All rights reserved.
All materials appearing as Jensen Infrastructure documents and the like are proprietary work product and are protected under U.S. copyright and other laws. Unless in conjunction with business conducted with Jensen Infrastructure , any use of Jensen Infrastructure work product without express, written consent is prohibited, and recipient is prohibited from distributing any and all work product to non-approved third parties under penalty of civil action.
This product shall only be produced in a Jensen Infrastructure facility.

NAME & DESCRIPTION: 200079449 HANDLE RETAINER ALUMINUM		REV: C-1
WEIGHT: 0.129 lbmass	DRAWN BY: M. Newman	SHEET: 10 OF 23
CREATED: 9/7/2023	MODIFIED: 5/7/2025	

200079791.idw

NOT SYMMETRICAL

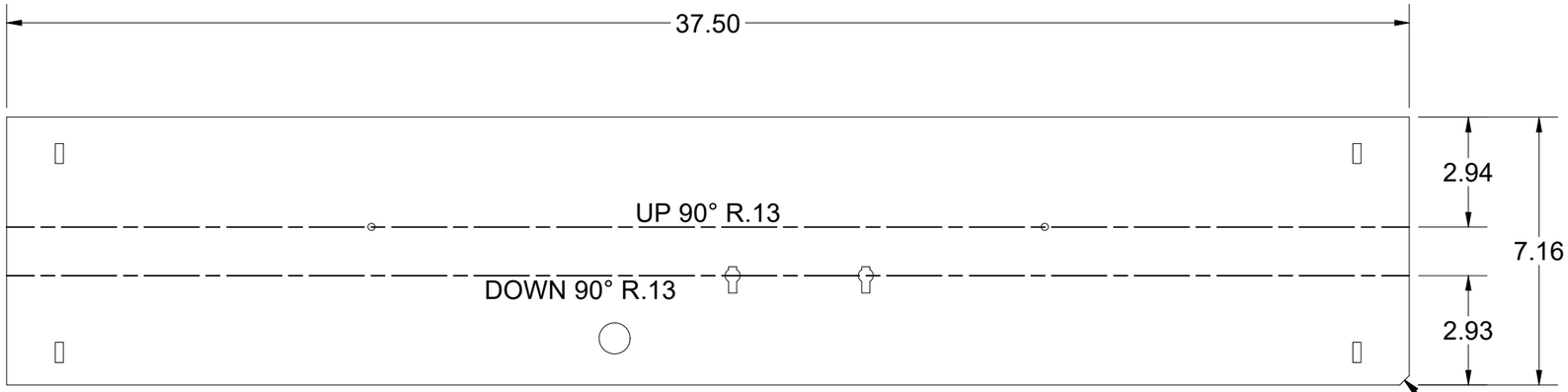

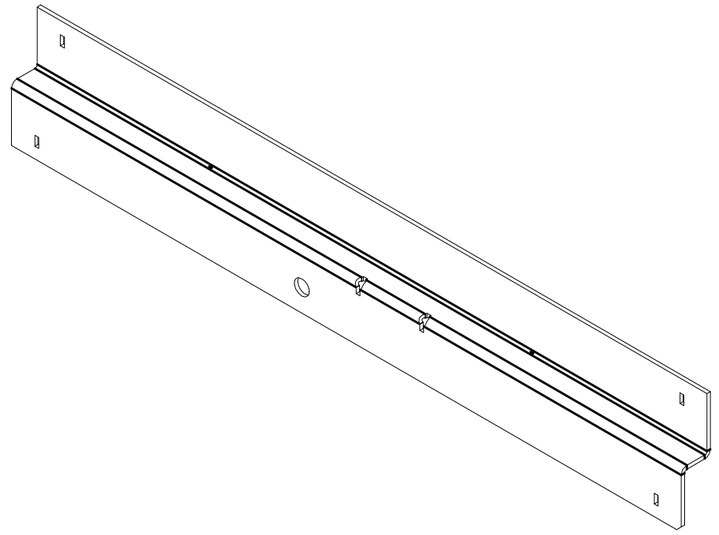

NOTE CORNER INDICATOR PRIOR TO BENDING

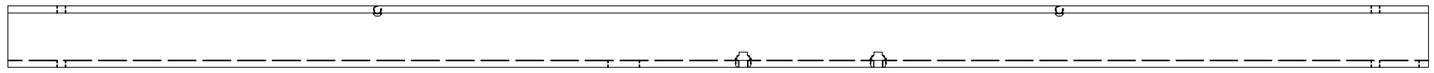

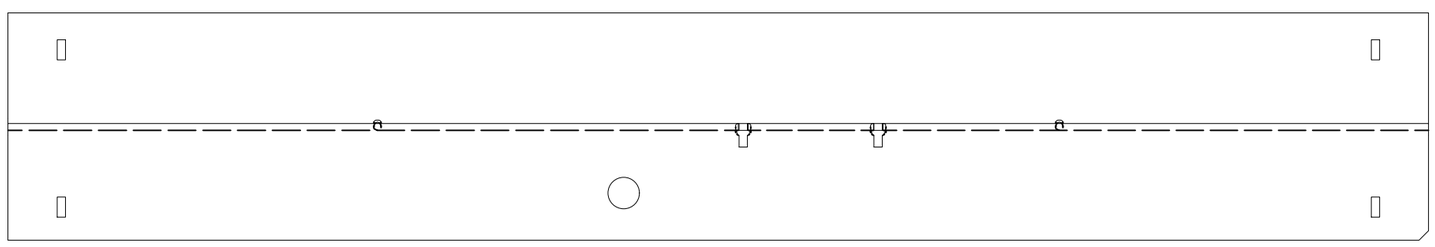

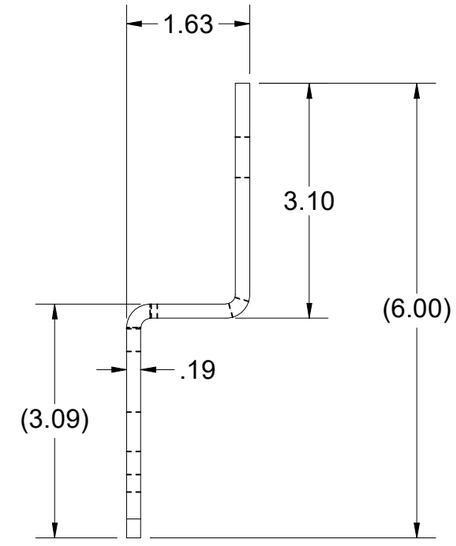

BEND TABLE			
BEND RADIUS	V-OPENING	BEND ANGLE	BEND DEDUCTION
0.125	1	90	0.325

MATERIAL IFS: 100007734

MATERIAL THK: 0.1875

MAT DESCRIPTION: STL ASTM A36 SM-HRPO 60X120 RAW .1875

Infrastructure JENSEN

527 Dunn Circle, Sparks, NV 89431
775-352-2716 FAX: 755-358-8127
JENSENMETALTECH.COM

©2025 Jensen Infrastructure - All rights reserved.
All materials appearing as Jensen Infrastructure documents and the like are proprietary work product and are protected under U.S. copyright and other laws. Unless in conjunction with business conducted with Jensen Infrastructure , any use of Jensen Infrastructure work product without express, written consent is prohibited, and recipient is prohibited from distributing any and all work product to non-approved third parties under penalty of civil action.
This product shall only be produced in a Jensen Infrastructure facility.

NAME & DESCRIPTION: 200080268
Frame Component Steel Frame Front, Cast In

REV: C-1

WEIGHT: 14.375 lbmass

DRAWN BY: M. Newman

CREATED: 9/7/2023

MODIFIED: 5/7/2025

SHEET: 11 OF 23

200079791.idw

SYMMETRICAL

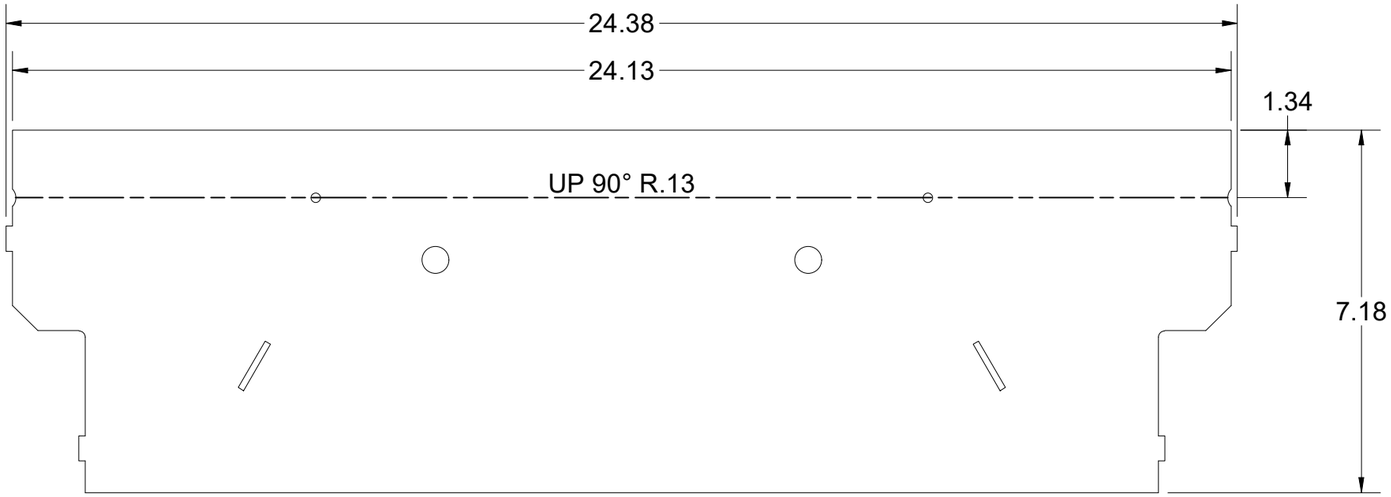

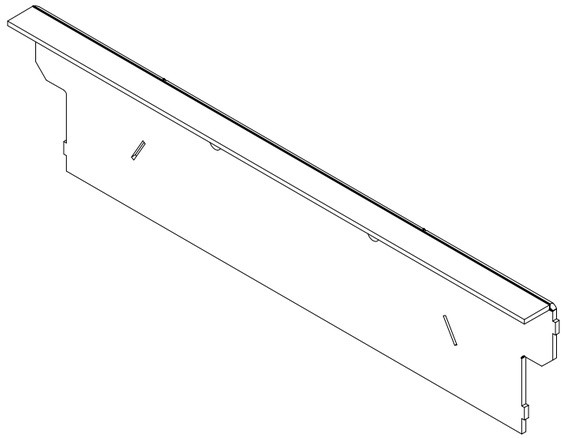

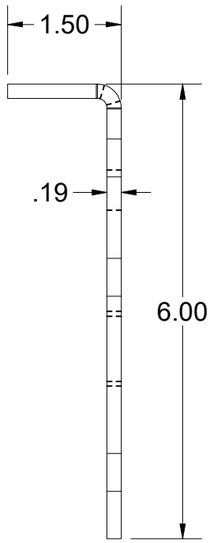

BEND TABLE			
BEND RADIUS	V-OPENING	BEND ANGLE	BEND DEDUCTION
0.125	1	90	0.325

MATERIAL IFS: 100007734

MATERIAL THK: 0.1875

MAT DESCRIPTION: STL ASTM A36 SM-HRPO 60X120 RAW .1875

Infrastructure JENSEN
527 Dunn Circle, Sparks, NV 89431
775-352-2716 FAX: 755-358-8127
JENSENMETALTECH.COM

©2025 Jensen Infrastructure - All rights reserved.
All materials appearing as Jensen Infrastructure documents and the like are proprietary work product and are protected under U.S. copyright and other laws. Unless in conjunction with business conducted with Jensen Infrastructure , any use of Jensen Infrastructure work product without express, written consent is prohibited, and recipient is prohibited from distributing any and all work product to non-approved third parties under penalty of civil action.
This product shall only be produced in a Jensen Infrastructure facility.

NAME & DESCRIPTION: 200080269
Frame Component Steel Frame Side, Cast In

REV: C-1

WEIGHT: 8.728 lbmass

DRAWN BY: M. Newman

CREATED: 9/7/2023

MODIFIED: 5/7/2025

SHEET: 12 OF 23

200079791.idw

SYMMETRICAL

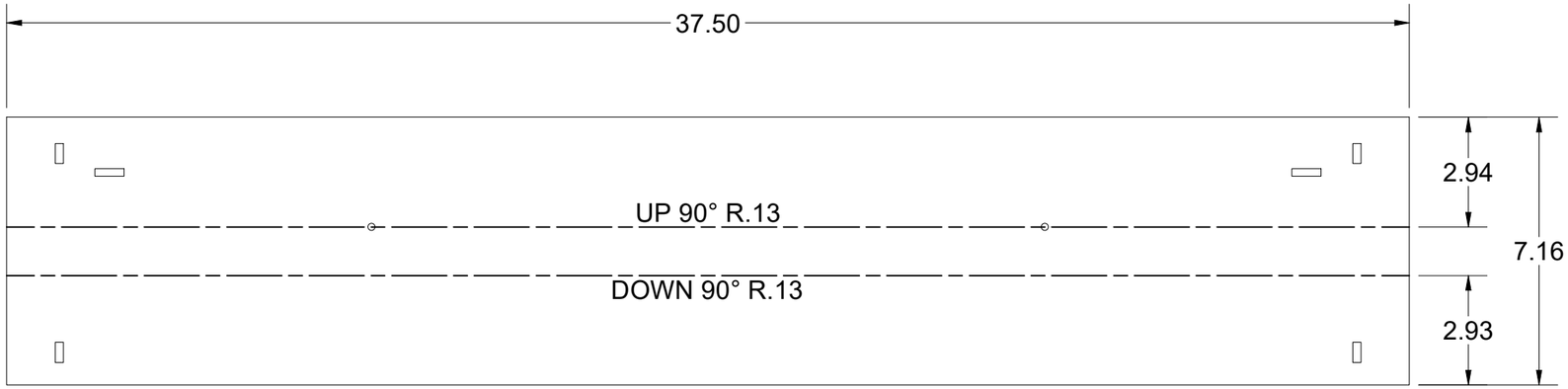

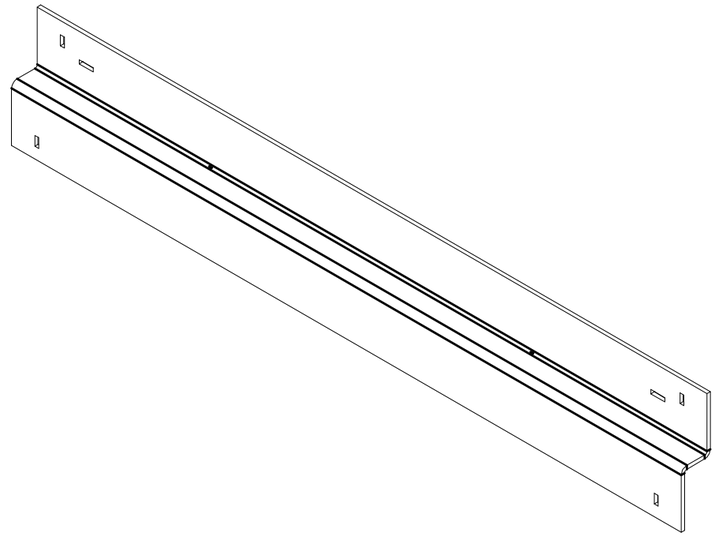



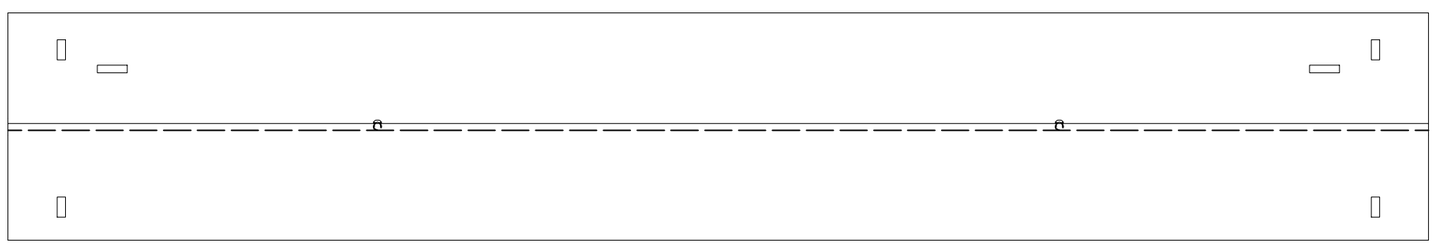

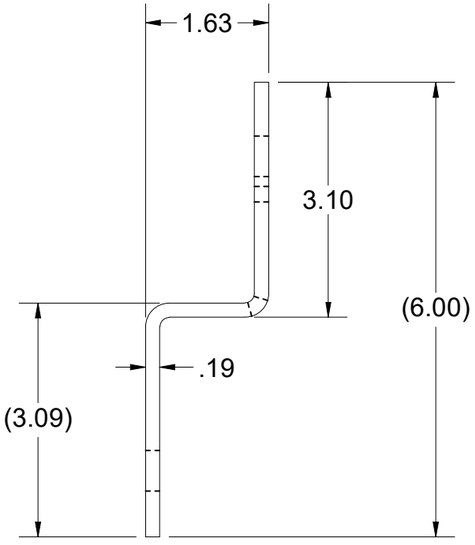

200079791.idw

BEND TABLE				MATERIAL IFS: 100007734
BEND RADIUS	V-OPENING	BEND ANGLE	BEND DEDUCTION	MATERIAL THK: 0.1875
0.125	1	90	0.325	MAT DESCRIPTION: STL ASTM A36 SM-HRPO 60X120 RAW .1875

Infrastructure JENSEN

527 Dunn Circle, Sparks, NV 89431
775-352-2716 FAX: 755-358-8127
JENSENMETALTECH.COM

©2025 Jensen Infrastructure - All rights reserved.
All materials appearing as Jensen Infrastructure documents and the like are proprietary work product and are protected under U.S. copyright and other laws. Unless in conjunction with business conducted with Jensen Infrastructure , any use of Jensen Infrastructure work product without express, written consent is prohibited, and recipient is prohibited from distributing any and all work product to non-approved third parties under penalty of civil action.
This product shall only be produced in a Jensen Infrastructure facility.

NAME & DESCRIPTION: 200080270 Frame Component Steel Frame End, Cast In		REV: C-1
WEIGHT: 14.411 lbmass	DRAWN BY: M. Newman	SHEET: 13 OF 23
CREATED: 9/7/2023	MODIFIED: 5/7/2025	



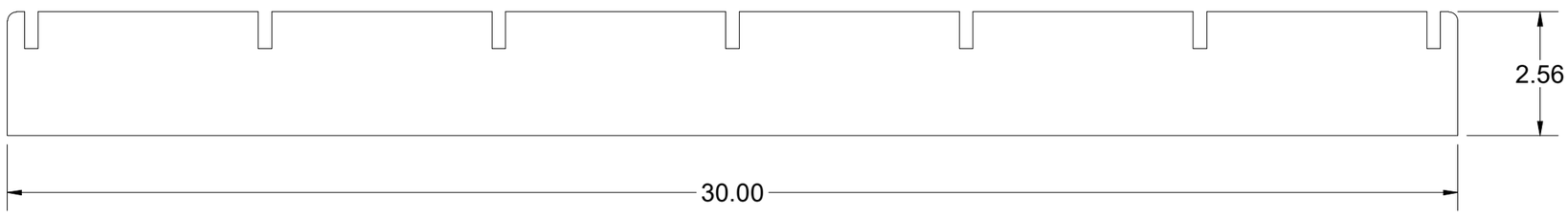

BEND TABLE				MATERIAL IFS: 100007804
BEND RADIUS	V-OPENING	BEND ANGLE	BEND DEDUCTION	MATERIAL THK: 0.25
-	-	-	-	MAT DESCRIPTION: SHT ALUM ASTM 6061 SM-RAW 60W .25

Infrastructure
JENSEN
527 Dunn Circle, Sparks, NV 89431
775-352-2716 FAX: 755-358-8127
JENSENMETALTECH.COM

©2025 Jensen Infrastructure - All rights reserved.
All materials appearing as Jensen Infrastructure documents and the like are proprietary work product and are protected under U.S. copyright and other laws. Unless in conjunction with business conducted with Jensen Infrastructure , any use of Jensen Infrastructure work product without express, written consent is prohibited, and recipient is prohibited from distributing any and all work product to non-approved third parties under penalty of civil action.
This product shall only be produced in a Jensen Infrastructure facility.

NAME & DESCRIPTION: 200080272 Door Component Aluminum Side Bar		REV: C-1
WEIGHT: 1.846 lbmass	DRAWN BY: M. Newman	SHEET: 14 OF 23
CREATED: 9/7/2023	MODIFIED: 5/7/2025	

200079791.idw

NOT SYMMETRICAL

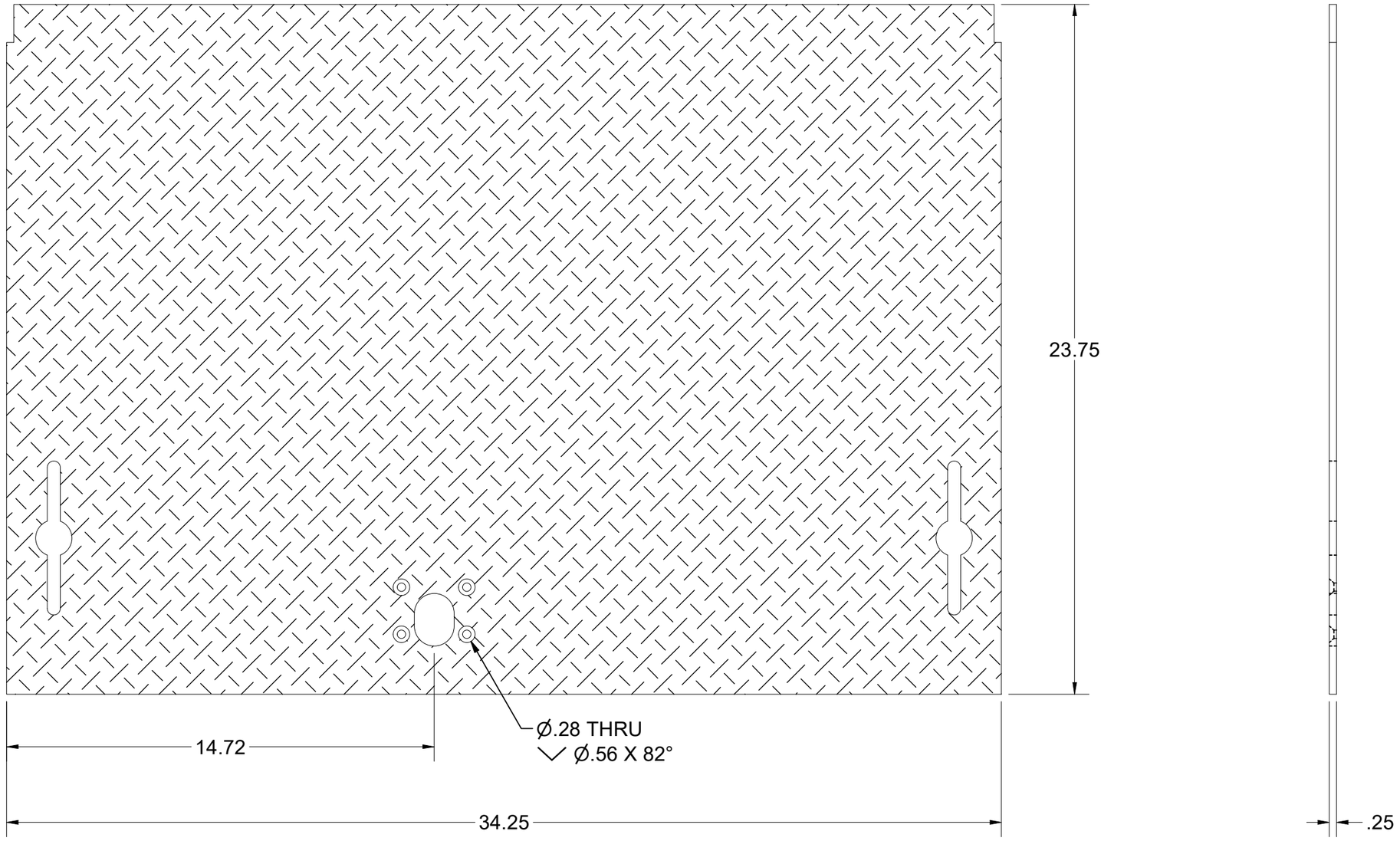

200079791.idw

BEND TABLE				MATERIAL IFS: 100007808
BEND RADIUS	V-OPENING	BEND ANGLE	BEND DEDUCTION	MATERIAL THK: 0.25
-	-	- 0	-	MAT DESCRIPTION: SHT ALUM ASTM 6061 DP RAW .25

Infrastructure JENSEN
527 Dunn Circle, Sparks, NV 89431
775-352-2716 FAX: 755-358-8127
JENSENMETALTECH.COM

©2025 Jensen Infrastructure - All rights reserved. All materials appearing as Jensen Infrastructure documents and the like are proprietary work product and are protected under U.S. copyright and other laws. Unless in conjunction with business conducted with Jensen Infrastructure , any use of Jensen Infrastructure work product without express, written consent is prohibited, and recipient is prohibited from distributing any and all work product to non-approved third parties under penalty of civil action. This product shall only be produced in a Jensen Infrastructure facility.

NAME & DESCRIPTION: 200080273 Door Component Aluminum Plate, Top		REV: C-1
WEIGHT: 20.648 lbmass	DRAWN BY: M. Newman	SHEET: 15 OF 23
CREATED: 9/7/2023	MODIFIED: 5/7/2025	

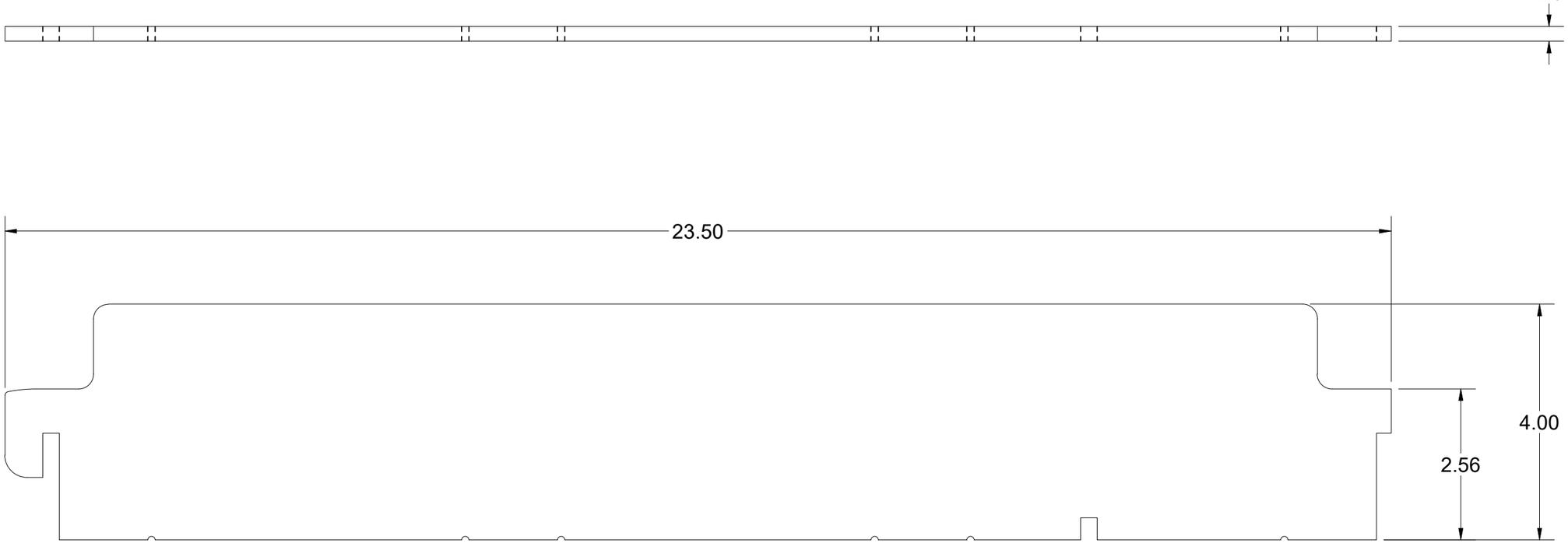

BEND TABLE				MATERIAL IFS: 100007804
BEND RADIUS	V-OPENING	BEND ANGLE	BEND DEDUCTION	MATERIAL THK: 0.25
-	-	-	-	MAT DESCRIPTION: SHT ALUM ASTM 6061 SM-RAW 60W .25

Infrastructure
JENSEN
527 Dunn Circle, Sparks, NV 89431
775-352-2716 FAX: 755-358-8127
JENSENMETALTECH.COM

©2025 Jensen Infrastructure - All rights reserved.
All materials appearing as Jensen Infrastructure documents and the like are proprietary work product and are protected under U.S. copyright and other laws. Unless in conjunction with business conducted with Jensen Infrastructure , any use of Jensen Infrastructure work product without express, written consent is prohibited, and recipient is prohibited from distributing any and all work product to non-approved third parties under penalty of civil action.
This product shall only be produced in a Jensen Infrastructure facility.

NAME & DESCRIPTION: 200080274 Door Component Aluminum Stiffener, Plate		REV: C-1
WEIGHT: 2.161 lbmass	DRAWN BY: M. Newman	SHEET: 16 OF 23
CREATED: 9/7/2023	MODIFIED: 5/7/2025	

200079791.idw

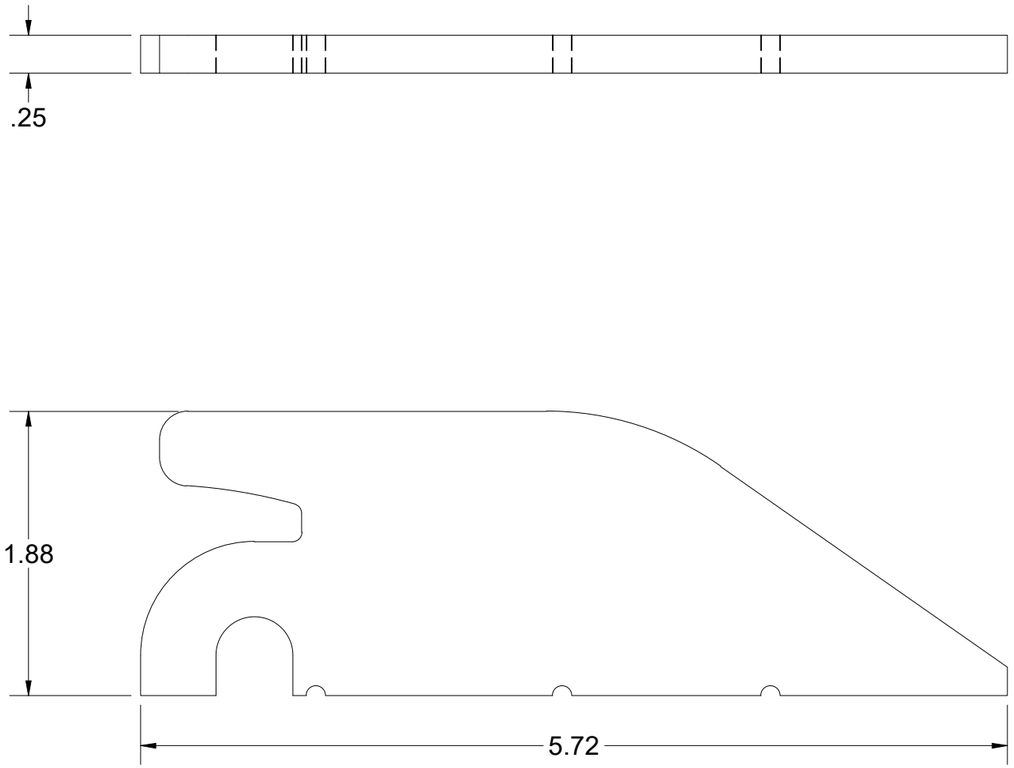

BEND TABLE				MATERIAL IFS: 100007804
BEND RADIUS	V-OPENING	BEND ANGLE	BEND DEDUCTION	MATERIAL THK: 0.25
-	-	- 0	-	MAT DESCRIPTION: SHT ALUM ASTM 6061 SM-RAW 60W .25

Infrastructure
JENSEN
527 Dunn Circle, Sparks, NV 89431
775-352-2716 FAX: 755-358-8127
JENSENMETALTECH.COM

©2025 Jensen Infrastructure - All rights reserved.
All materials appearing as Jensen Infrastructure documents and the like are proprietary work product and are protected under U.S. copyright and other laws. Unless in conjunction with business conducted with Jensen Infrastructure , any use of Jensen Infrastructure work product without express, written consent is prohibited, and recipient is prohibited from distributing any and all work product to non-approved third parties under penalty of civil action.
This product shall only be produced in a Jensen Infrastructure facility.

NAME & DESCRIPTION: 200080300 Door Component Hinge, Aluminum		REV: C-1
WEIGHT: 0.192 lbmass	DRAWN BY: M. Newman	SHEET: 17 OF 23
CREATED: 9/7/2023	MODIFIED: 5/7/2025	

200079791.idw

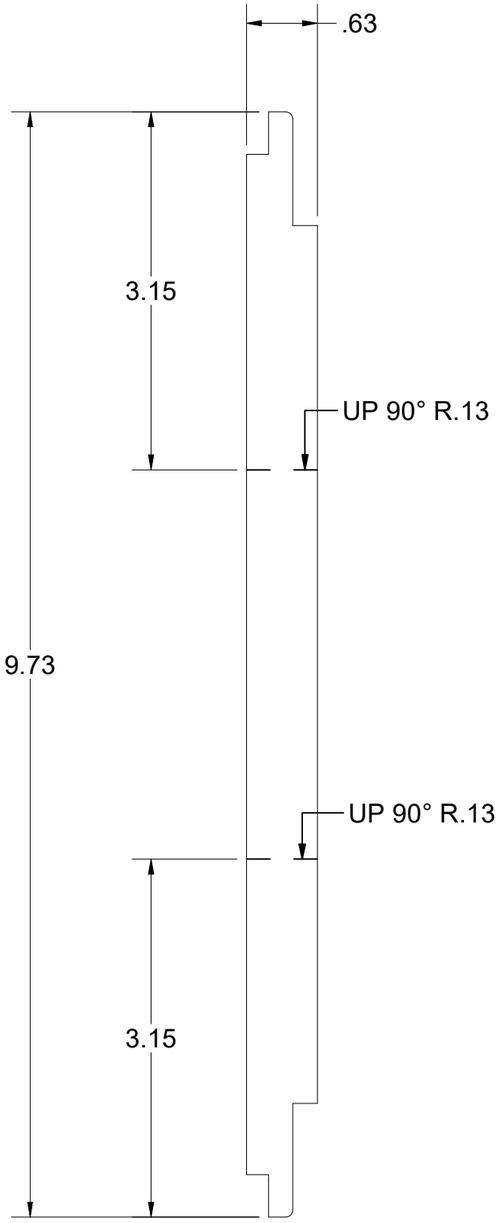

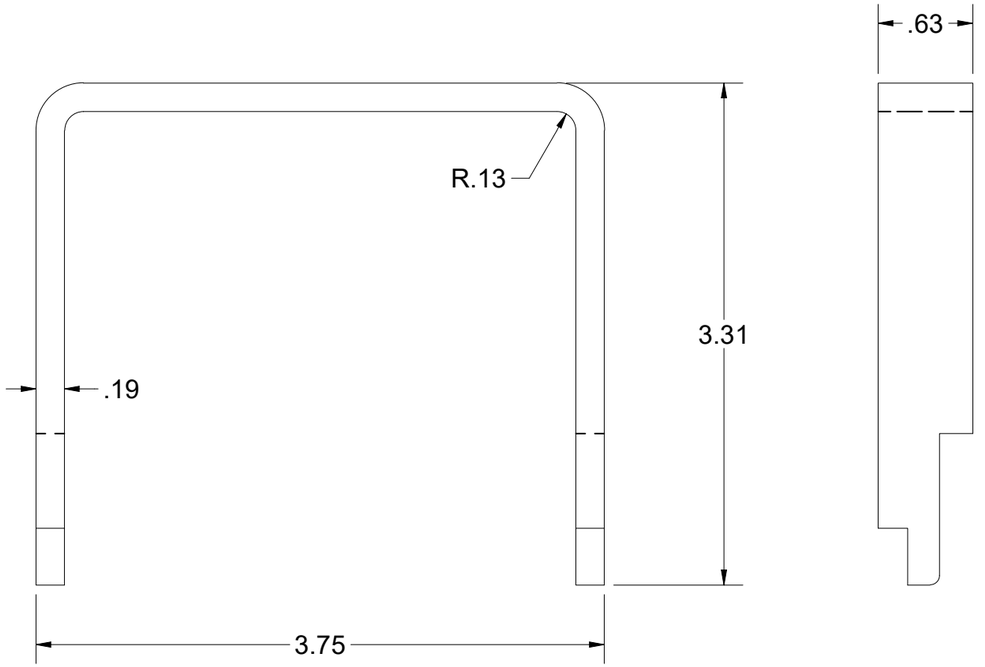



BEND TABLE				MATERIAL IFS: 100007734
BEND RADIUS	V-OPENING	BEND ANGLE	BEND DEDUCTION	MATERIAL THK: 0.1875
0.125	1	90	0.3250	MAT DESCRIPTION: STL ASTM A36 SM-HRPO 60X120 RAW .1875

Infrastructure
JENSEN
527 Dunn Circle, Sparks, NV 89431
775-352-2716 FAX: 755-358-8127
JENSENMETALTECH.COM

©2025 Jensen Infrastructure - All rights reserved.
All materials appearing as Jensen Infrastructure documents and the like are proprietary work product and are protected under U.S. copyright and other laws. Unless in conjunction with business conducted with Jensen Infrastructure , any use of Jensen Infrastructure work product without express, written consent is prohibited, and recipient is prohibited from distributing any and all work product to non-approved third parties under penalty of civil action.
This product shall only be produced in a Jensen Infrastructure facility.

NAME & DESCRIPTION: 200080332 U-SHAPE SLAM LATCH HOOK 3.5" TALL FRAME		REV: C-1
WEIGHT: 0.295 lbmass	DRAWN BY: M. Newman	SHEET: 18 OF 23
CREATED: 9/7/2023	MODIFIED: 5/7/2025	

200079791.idw

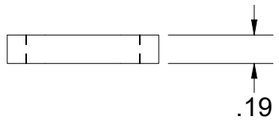

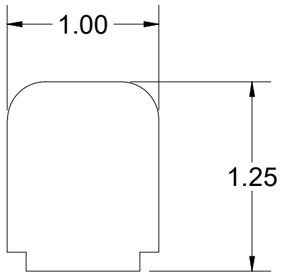

BEND TABLE			
BEND RADIUS	V-OPENING	BEND ANGLE	BEND DEDUCTION
-	-	-	-

MATERIAL IFS: 100007734

MATERIAL THK: 0.1875

MAT DESCRIPTION: STL ASTM A36 SM-HRPO 60X120 RAW .1875

Infrastructure
JENSEN
527 Dunn Circle, Sparks, NV 89431
775-352-2716 FAX: 755-358-8127
JENSENMETALTECH.COM

©2025 Jensen Infrastructure - All rights reserved.
All materials appearing as Jensen Infrastructure documents and the like are proprietary work product and are protected under U.S. copyright and other laws. Unless in conjunction with business conducted with Jensen Infrastructure , any use of Jensen Infrastructure work product without express, written consent is prohibited, and recipient is prohibited from distributing any and all work product to non-approved third parties under penalty of civil action.
This product shall only be produced in a Jensen Infrastructure facility.

NAME & DESCRIPTION: 200084007
Frame Component- Door Hinge Hook

REV: C-1

WEIGHT: 0.063 lbmass

DRAWN BY: M. Newman

CREATED: 9/7/2023

MODIFIED: 5/7/2025

SHEET: 19 OF 23

200079791.idw

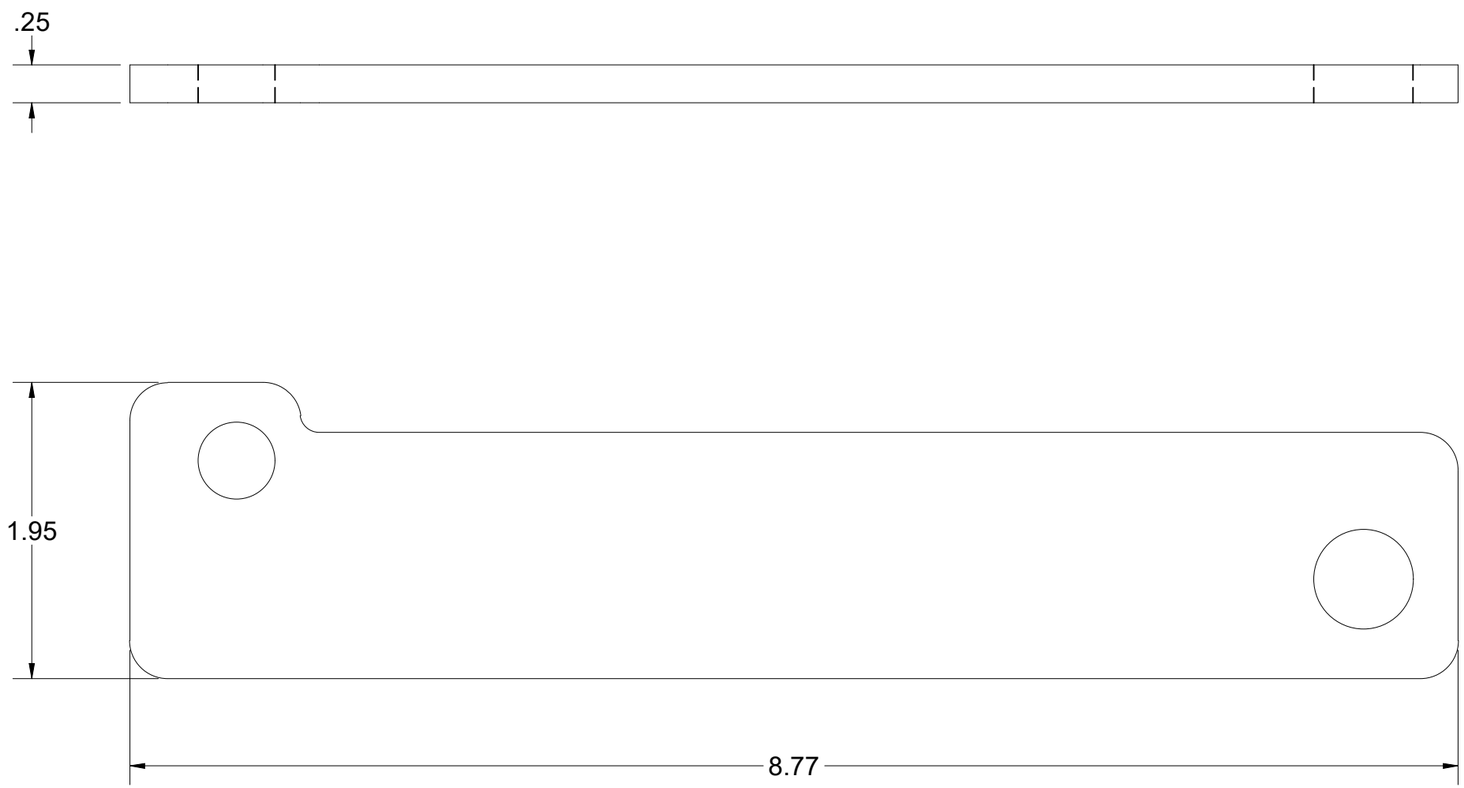

BEND TABLE				MATERIAL IFS: 100007948
BEND RADIUS	V-OPENING	BEND ANGLE	BEND DEDUCTION	MATERIAL THK: 0.25
-	-	- 0	-	MAT DESCRIPTION: SHT STL 60 X 120 X .25 316SS

Infrastructure
JENSEN
527 Dunn Circle, Sparks, NV 89431
775-352-2716 FAX: 755-358-8127
JENSENMETALTECH.COM

©2025 Jensen Infrastructure - All rights reserved.
All materials appearing as Jensen Infrastructure documents and the like are proprietary work product and are protected under U.S. copyright and other laws. Unless in conjunction with business conducted with Jensen Infrastructure , any use of Jensen Infrastructure work product without express, written consent is prohibited, and recipient is prohibited from distributing any and all work product to non-approved third parties under penalty of civil action.
This product shall only be produced in a Jensen Infrastructure facility.

NAME & DESCRIPTION: 200084012 HINGE PLATE PNW STYLE, SS		REV: C-1
WEIGHT: 1.012 lbmass	DRAWN BY: M. Newman	SHEET: 20 OF 23
CREATED: 9/7/2023	MODIFIED: 5/7/2025	

200079791.idw

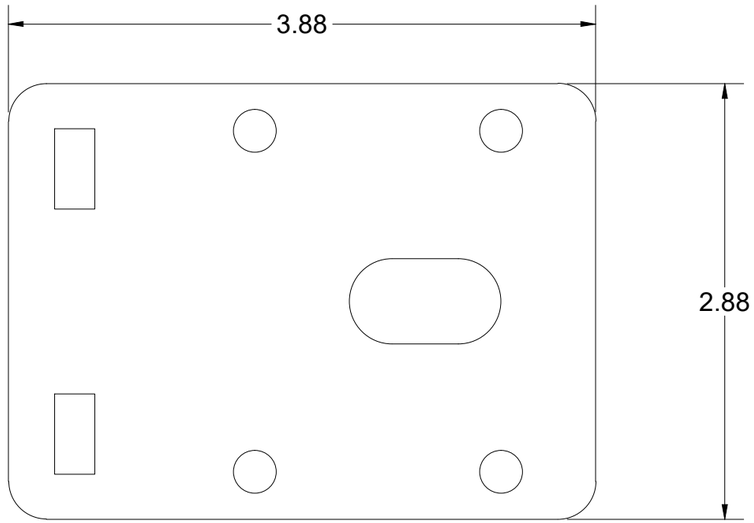

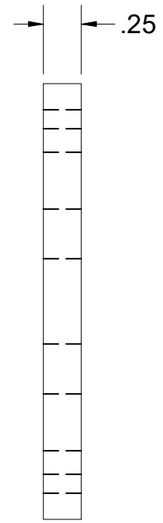

BEND TABLE				MATERIAL IFS: 100007804			
BEND RADIUS	V-OPENING	BEND ANGLE	BEND DEDUCTION	MATERIAL THK: 0.25			
0.125	2	90	0.44	MAT DESCRIPTION: SHT ALUM ASTM 6061 SM-RAW 60W .25			

Infrastructure
JENSEN
527 Dunn Circle, Sparks, NV 89431
775-352-2716 FAX: 755-358-8127
JENSENMETALTECH.COM

©2025 Jensen Infrastructure - All rights reserved.
All materials appearing as Jensen Infrastructure documents and the like are proprietary work product and are protected under U.S. copyright and other laws. Unless in conjunction with business conducted with Jensen Infrastructure , any use of Jensen Infrastructure work product without express, written consent is prohibited, and recipient is prohibited from distributing any and all work product to non-approved third parties under penalty of civil action.
This product shall only be produced in a Jensen Infrastructure facility.

NAME & DESCRIPTION: 200101000 Slam Latch Retainer Base Plate, Aluminum		REV: C-1
WEIGHT: 0.247 lbmass	DRAWN BY: M. Newman	SHEET: 21 OF 23
CREATED: 9/7/2023	MODIFIED: 5/7/2025	

200079791.idw

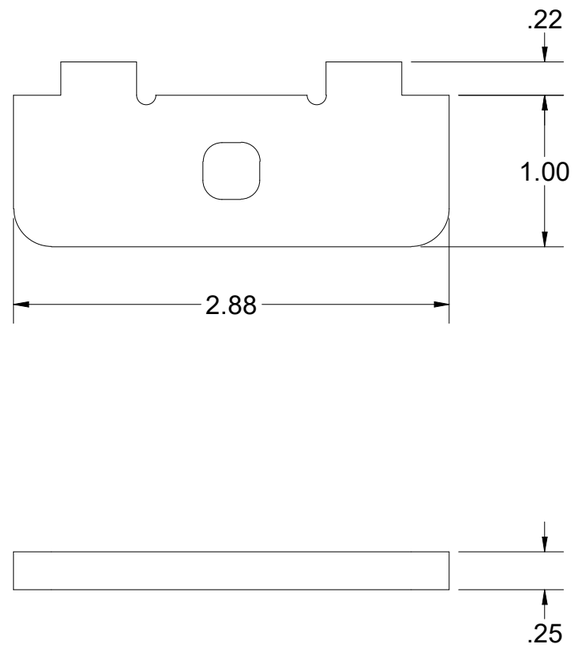

BEND TABLE				MATERIAL IFS: 100007804
BEND RADIUS	V-OPENING	BEND ANGLE	BEND DEDUCTION	MATERIAL THK: 0.25
0.125	2	90	0.44	MAT DESCRIPTION: SHT ALUM ASTM 6061 SM-RAW 60W .25

Infrastructure
JENSEN
527 Dunn Circle, Sparks, NV 89431
775-352-2716 FAX: 755-358-8127
JENSENMETALTECH.COM

©2025 Jensen Infrastructure - All rights reserved.
All materials appearing as Jensen Infrastructure documents and the like are proprietary work product and are protected under U.S. copyright and other laws. Unless in conjunction with business conducted with Jensen Infrastructure , any use of Jensen Infrastructure work product without express, written consent is prohibited, and recipient is prohibited from distributing any and all work product to non-approved third parties under penalty of civil action.
This product shall only be produced in a Jensen Infrastructure facility.

NAME & DESCRIPTION:		REV:
200101027 Slam Latch Retainer Flange Plate, Aluminum		C-1
WEIGHT: 0.072 lbmass	DRAWN BY: M. Newman	SHEET: 22 OF 23
CREATED: 9/7/2023	MODIFIED: 5/7/2025	

200079791.idw

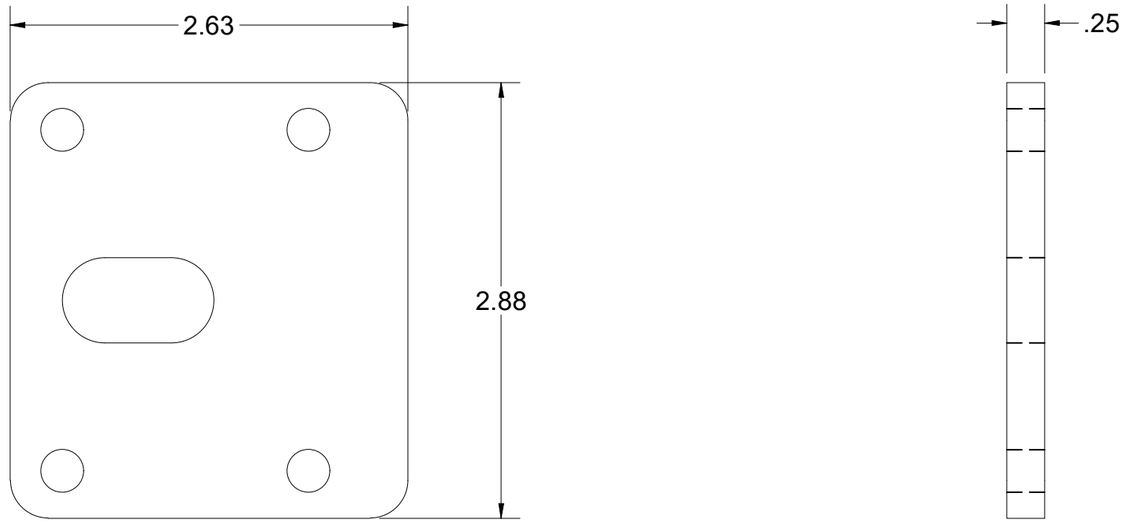

BEND TABLE				MATERIAL IFS: 100007804
BEND RADIUS	V-OPENING	BEND ANGLE	BEND DEDUCTION	MATERIAL THK: 0.25
-	-	- 0	-	MAT DESCRIPTION: SHT ALUM ASTM 6061 SM-RAW 60W .25

Infrastructure
JENSEN
527 Dunn Circle, Sparks, NV 89431
775-352-2716 FAX: 755-358-8127
JENSENMETALTECH.COM

©2025 Jensen Infrastructure - All rights reserved.
All materials appearing as Jensen Infrastructure documents and the like are proprietary work product and are protected under U.S. copyright and other laws. Unless in conjunction with business conducted with Jensen Infrastructure , any use of Jensen Infrastructure work product without express, written consent is prohibited, and recipient is prohibited from distributing any and all work product to non-approved third parties under penalty of civil action.
This product shall only be produced in a Jensen Infrastructure facility.

NAME & DESCRIPTION: 200101034 Slam Latch Spacer Plate - 1/4" Thick, Aluminum		REV: C-1
WEIGHT: 0.165 lbmass	DRAWN BY: M. Newman	SHEET: 23 OF 23
CREATED: 9/7/2023	MODIFIED: 5/7/2025	

200079791.idw