BILL OF MATERIALS

ITEM	QTY	PART NUMBER	DESCRIPTION
1	1	100007383	HPC 1324x18 Polymer Box 1/2-13 SS Nut V0
2	2	100004205	BOLT HEX 1/2-13 UNC 3 304SS
3	2	100025985	WASHER FLAT 1/2 TYPE B NARROW 304SS
4	1	100042298	HPC 1324 SMC Cover, Tier-22, Bolt Down, Nameplate

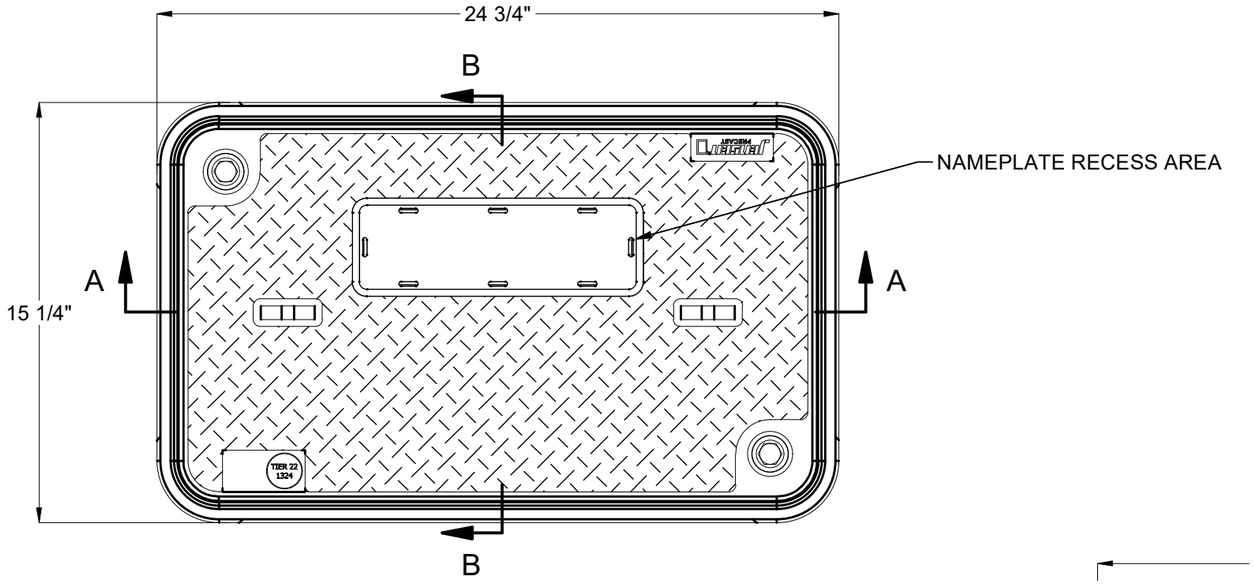

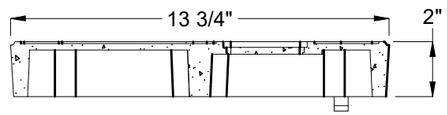

LID

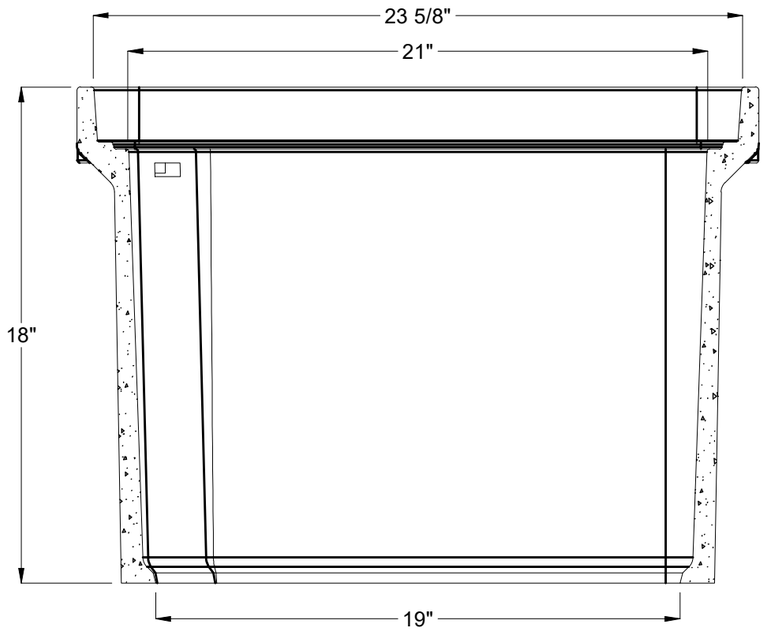

SECTION A-A

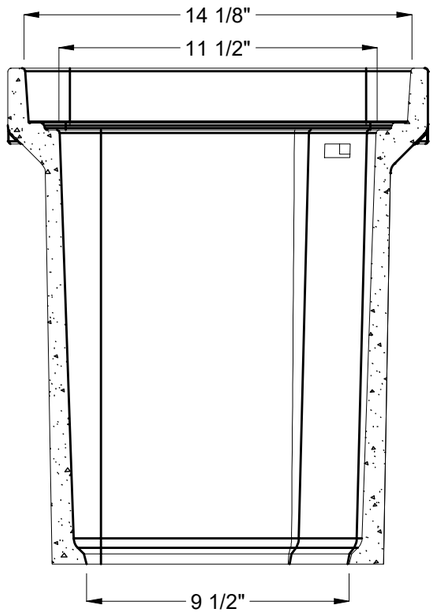

SECTION B-B

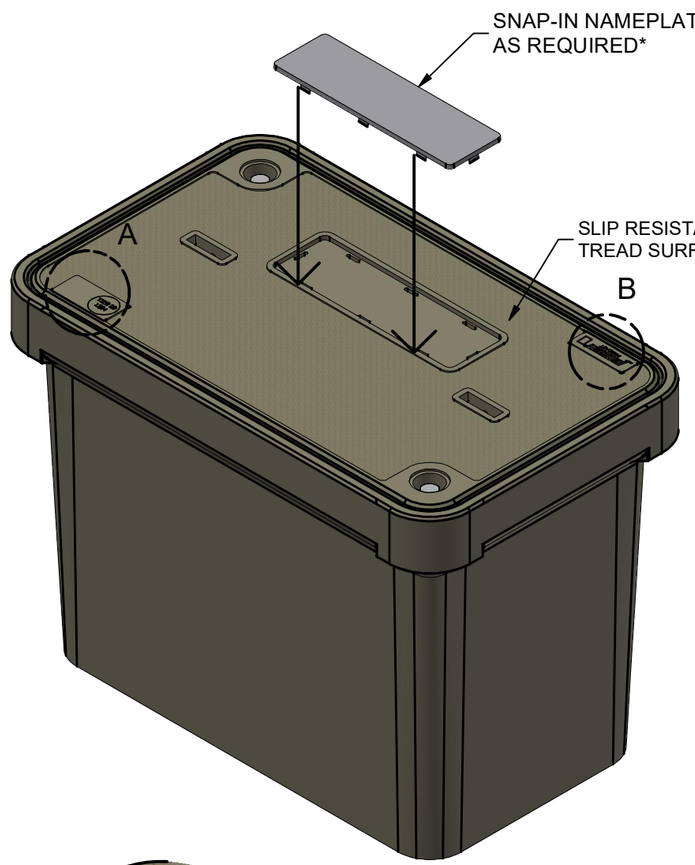

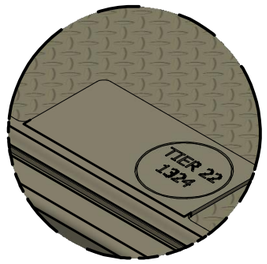

DETAIL A

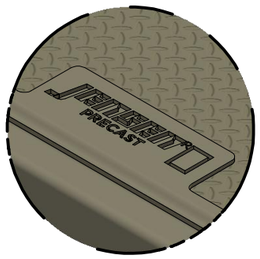

DETAIL B

*PATENT PENDING

200079740.idw

CHANGE HISTORY			
NO.	DESCRIPTION	DATE	BY
A	INITIAL RELEASE	10/07/2023	MB

PALLET QUANTITY:	18	APPROX. WEIGHT:	89.49 lbs
CERTIFICATION:		DESIGN/TEST LOAD:	22.5/33.75 kip
DESIGN SPEC:	ANSI/SCTE-77	LOADING SPEC:	Tier-22
AGENCY:		AGENCY SPEC:	

JENSEN PRECAST EST. 1968

WWW.JENSENPRECAST.COM

©2018 Jensen Precast- All rights reserved.
All materials appearing as Jensen Precast documents and the like are proprietary work product and are protected under U.S. copyright and other laws.
Unless in conjunction with business conducted with Jensen Precast, any use of Jensen Precast work product without express, written consent is prohibited, and recipient is prohibited from distributing any and all work product to non-approved third parties under penalty of civil action.

DESCRIPTION:	HPC 1324x18 Polymer/SMC Assembly 1/2-13 SS Nut Nameplate		REV: A-2
PART #:	200079740	DRAWN BY:	M. Baumann
CREATED:	10/6/2020	MODIFIED:	1/3/2024
			SHEET: 1 OF 1