BILL OF MATERIALS

ITEM	QTY	PART NUMBER	DESCRIPTION
1	1	200018043	HPC 1730x18 Polymer Box 1/2-13 SS Nut
2	2	100025985	WASHER FLAT 1/2 TYPE B NARROW 304SS
3	2	100004456	BOLT PENTA 1/2-13 UNC 0.875 HEAD 3L 304SS
4	1	200084084	NAME PLATE 3x10 POLY SNAP-IN - EDISON
5	1	100042301	HPC 1730 SMC Cover Tier-22 Bolt Down FB Nameplate

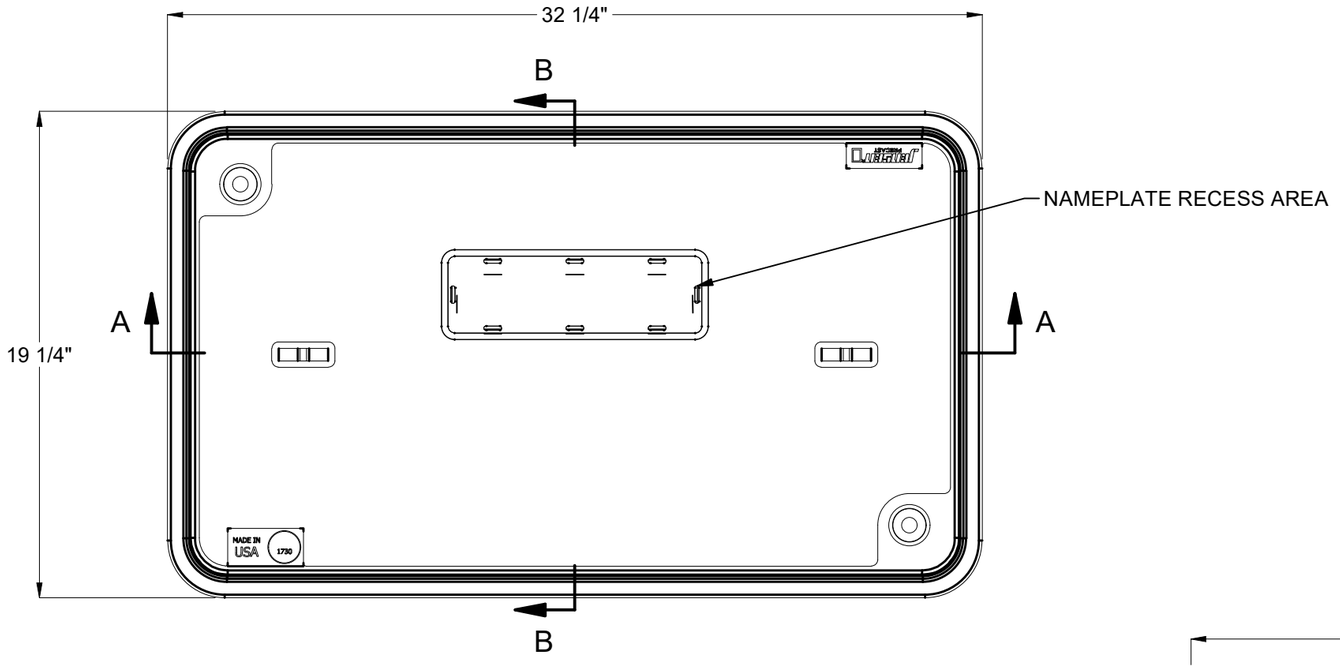

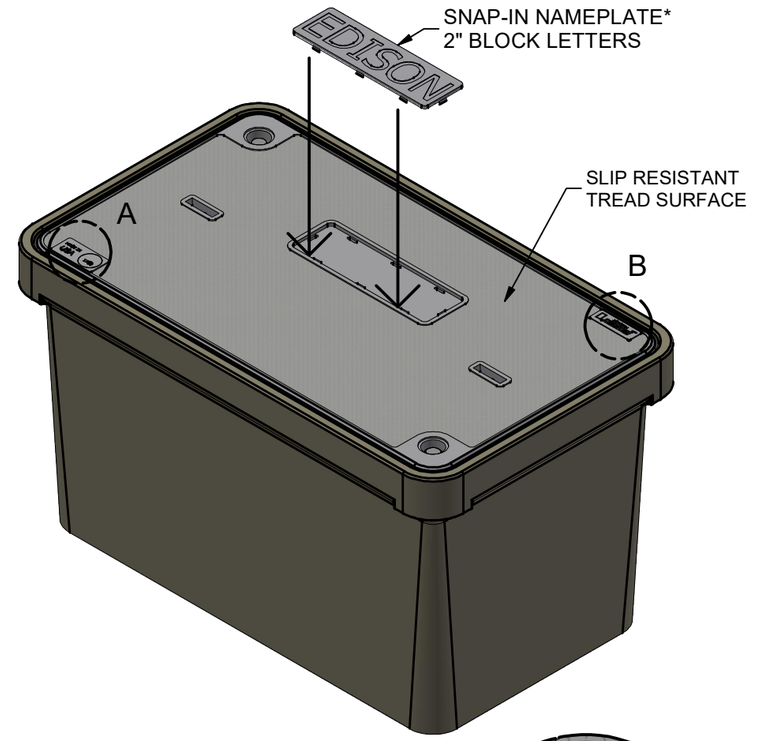

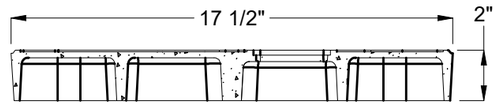

LID

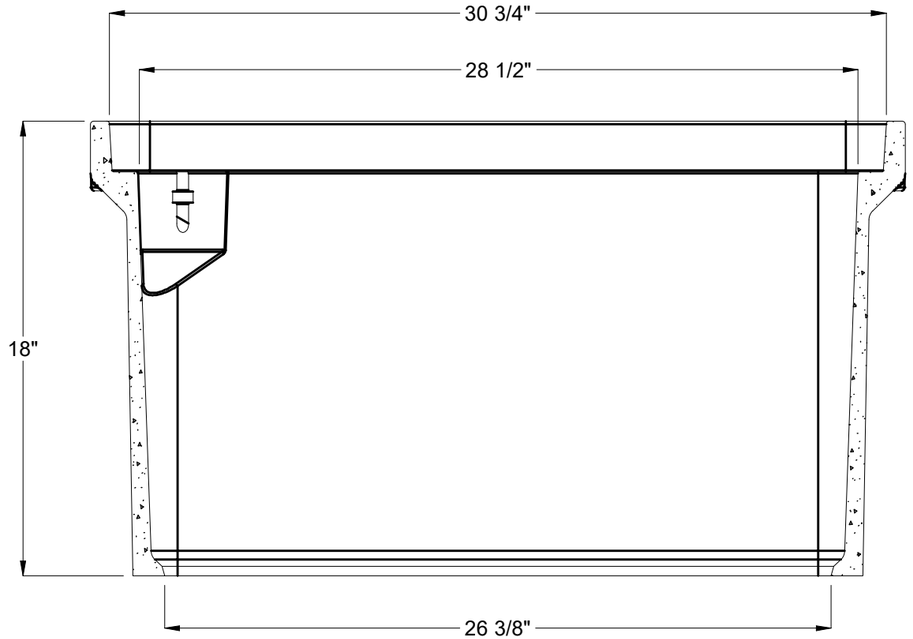

SECTION A-A

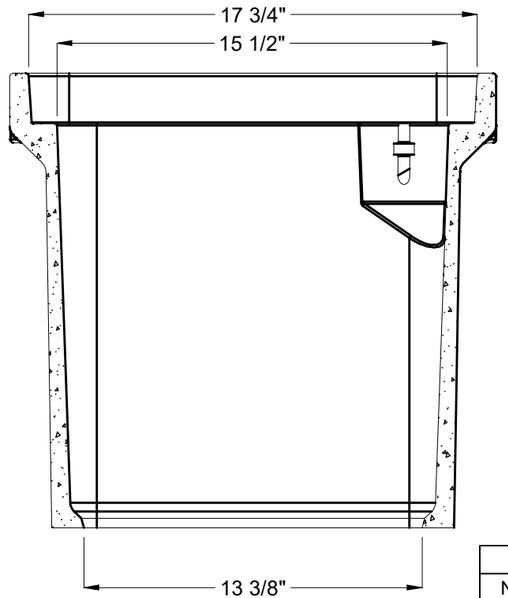

SECTION B-B

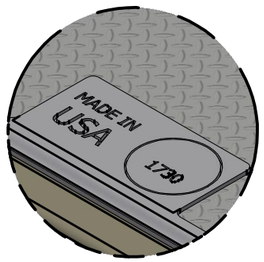

DETAIL A



DETAIL B

*PATENT PENDING

CHANGE HISTORY			
NO.	DESCRIPTION	DATE	BY
A	INITIAL RELEASE	12/7/2023	M.B.
B	LID SWITCH TO SMC	5/15/2024	DCH

PALLET QUANTITY:	9	APPROX. WEIGHT:	114.49 lbs
CERTIFICATION:		DESIGN/TEST LOAD:	22.5/33.75 kip
DESIGN SPEC:	ANSI/SCTE-77	LOADING SPEC:	Tier-22
AGENCY:	Edison	AGENCY SPEC:	SCE HP 205

JENSEN PRECAST EST. 1968

WWW.JENSENPRECAST.COM

©2018 Jensen Precast- All rights reserved.
All materials appearing as Jensen Precast documents and the like are proprietary work product and are protected under U.S. copyright and other laws.
Unless in conjunction with business conducted with Jensen Precast, any use of Jensen Precast work product without express, written consent is prohibited, and recipient is prohibited from distributing any and all work product to non-approved third parties under penalty of civil action.

DESCRIPTION: HPC 1730x18 Polymer/SMC Assembly 1/2-13 SS Penta Nameplate Edison SCE HP 205

REV: B-1

PART #:	200079524	DRAWN BY:	M. Baumann
CREATED:	8/25/2023	MODIFIED:	5/15/2024

SHEET: 1 OF 1

200079524.idw