NOTES
■ MUST BE INSTALLED PER "JENSEN PRECAST UNDERGROUND WASTEWATER PRECAST CONCRETE TANK INSTALLATION PROCEDURE" WHICH CAN BE FOUND AT https://www.jensenprecast.com/Tank-Installation-Procedure-d2106.pdf. THIS PROCEDURE ADDRESSES REQUIRED EXCAVATION, SITE PREPARATION, INSTALLATION, VENTILATION, AND WATER/VACCUM TESTING

BILL OF MATERIALS

ITEM	UNIT QTY	QTY	PART NUMBER	DESCRIPTION
1	1	1	200069628	Tank JOP 1500 Gallon x 8 Slab Top 24"E, 24"B, 24"E
2	1	1	200079497	Vertical Slab Baffle JOP 1500 4 Inch
3	1	1	200079481	Tank JOP 1500 Gallon 4 Inch Rect. Bottom Section Single Baffle Recess
4	2.000 ul	2.000 ul	100013648	SEALANT JOINT BUTYL RUBBER ASTM C-990 AND M198 CS-102 1IN EQUIV X14.5FT PER ROLL

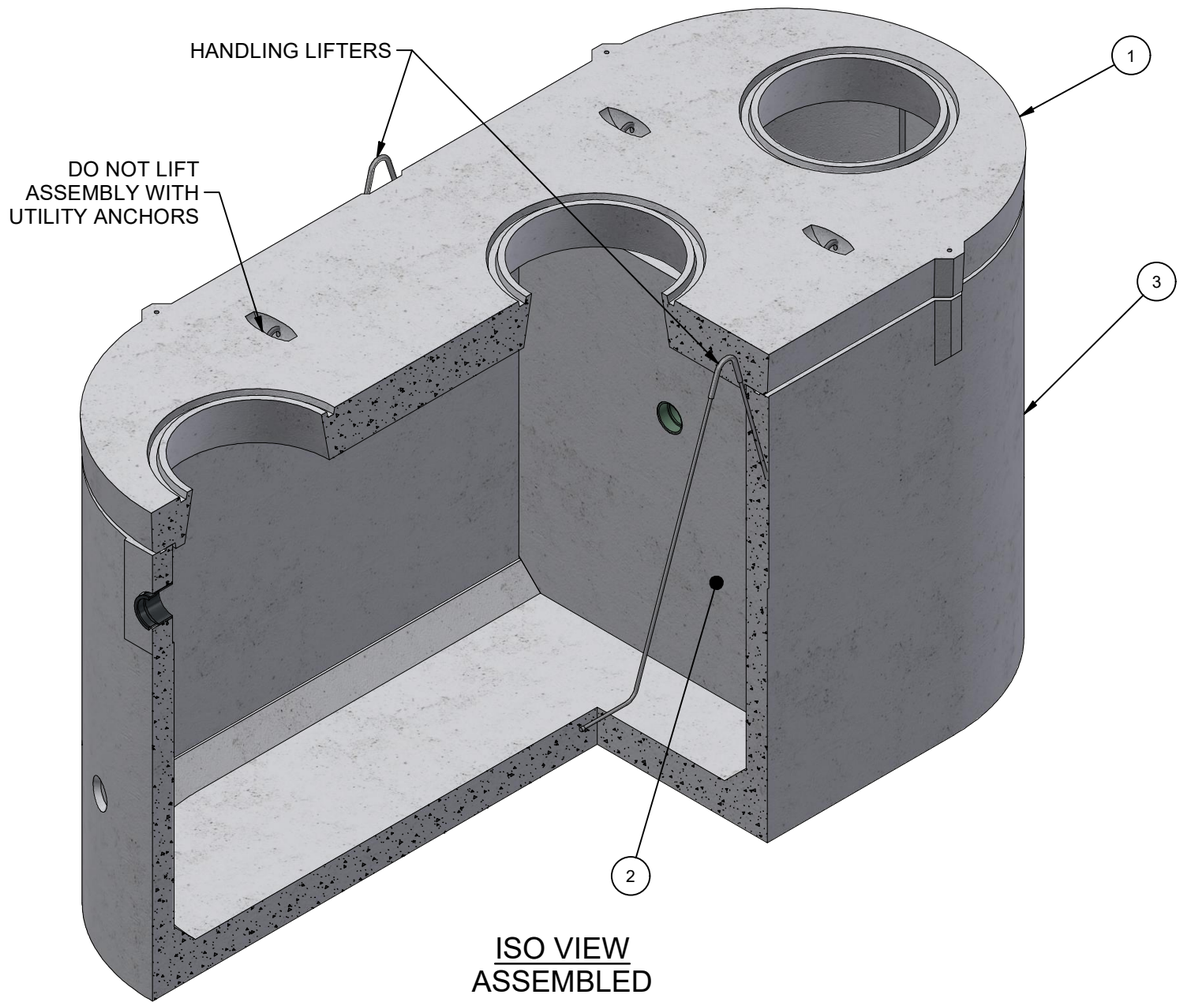

ISO VIEW
ASSEMBLED

200079487.idw

LIFTING NOTES
■ THIS CONCRETE PRODUCT IS DESIGNED TO BE LIFTED AT 2500PSI WITH 2 LIFT CONNECTIONS EQUALLY LOADED TO 2 LIFTING POINTS AT A MINIMUM 90° SLING ANGLE, MEASURED FROM HORIZONTAL.

CHANGE HISTORY			
NO.	DESCRIPTION	DATE	BY
1	2208-54239	8/25/2023	DCH

BURY DEPTH:	1.1' - 6.0' to Top		
WATER LEVEL:	Below Structure	APPROX. WEIGHT:	18771.12 Lbs
DESIGN SPEC:	ACI 318,ASTM C890	LOADING SPEC:	A-16 (AASHTO HS20-44)
REINFORCEMENT TYPE:		LIFTING TYPE:	Cable

JENSEN PRECAST EST. 1968

WWW.JENSENPRECAST.COM

©2023 Jensen Precast- All rights reserved.
All materials appearing as Jensen Precast documents and the like are proprietary work product and are protected under U.S. copyright and other laws.
Unless in conjunction with business conducted with Jensen Precast, any use of Jensen Precast work product without express, written consent is prohibited, and recipient is prohibited from distributing any and all work product to non-approved third parties under penalty of civil action.

DESCRIPTION: Tank JOP 1500 Gallon 4 Inch Assembly 24"E, 24"B, 24"E Single Baffle LAYOUT

REV: B-4

PART NUMBER:	200079487	DRAWN BY:	D. HUGHES
CREATED:	8/24/2023	MODIFIED:	10/31/2023

SHEET: 1 OF 2

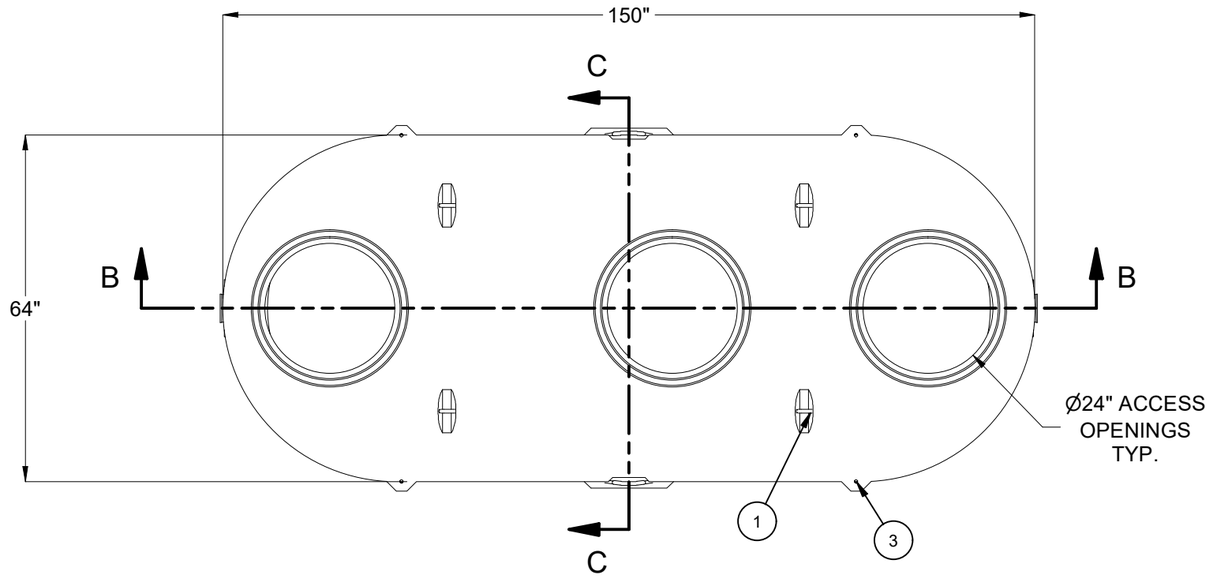

PLAN VIEW

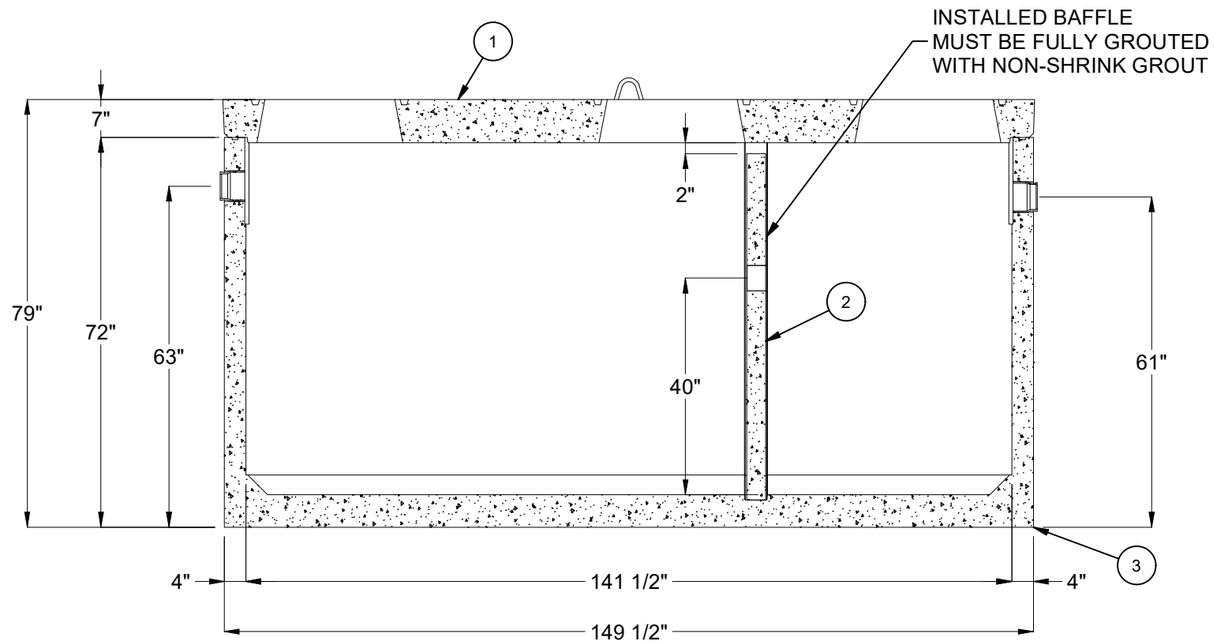

SECTION B-B

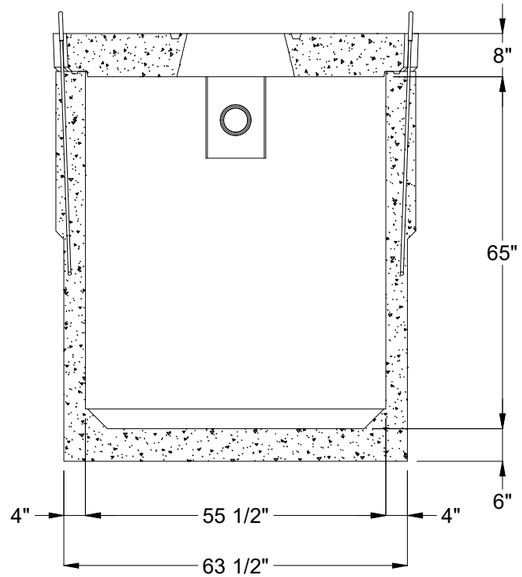

SECTION C-C

BURY DEPTH:	1.1' - 6.0' to Top			DESCRIPTION: Tank JOP 1500 Gallon 4 Inch Assembly 24"E, 24"B, 24"E Single Baffle LAYOUT ASSEMBLY	REV: B-4
WATER LEVEL:	Below Structure	APPROX. WEIGHT:	18771.12 Lbs		
DESIGN SPEC:	ACI 318,ASTM C890	LOADING SPEC:	A-16 (AASHTO HS20-44)		
REINFORCEMENT TYPE:		LIFTING TYPE:	Cable	PART NUMBER: 200079487 / DRAWN BY: D. HUGHES CREATED: 8/24/2023 / MODIFIED: 10/31/2023	SHEET: 2 OF 2

JENSEN PRECAST EST. 1968

WWW.JENSENPRECAST.COM

©2023 Jensen Precast- All rights reserved.
All materials appearing as Jensen Precast documents and the like are proprietary work product and are protected under U.S. copyright and other laws.
Unless in conjunction with business conducted with Jensen Precast, any use of Jensen Precast work product without express, written consent is prohibited, and recipient is prohibited from distributing any and all work product to non-approved third parties under penalty of civil action.

200079487.idw