NOTES
■ MUST BE INSTALLED PER "JENSEN PRECAST UNDERGROUND WASTEWATER PRECAST CONCRETE TANK INSTALLATION PROCEDURE" WHICH CAN BE FOUND AT https://www.jensenprecast.com/Tank-Installation-Procedure-d2106.pdf. THIS PROCEDURE ADDRESSES REQUIRED EXCAVATION, SITE PREPARATION, INSTALLATION, VENTILATION, AND WATER/VACCUM TESTING

BILL OF MATERIALS

ITEM	UNIT QTY	QTY	PART NUMBER	DESCRIPTION
1	1	1	200069628	Tank JOP 1500 Gallon x 8 Slab Top 24"E, 24"B, 24"E
2	1	1	200079478	Tank JOP 1500 Gallon 4/6 Inch Rect. Bottom Section Single Baffle Recess
3	1	1	200079498	Vertical Slab Baffle JOP 1500 6 Inch
4	2.000 ul	2.000 ul	100013648	SEALANT JOINT BUTYL RUBBER ASTM C-990 AND M198 CS-102 1IN EQUIV X14.5FT PER ROLL

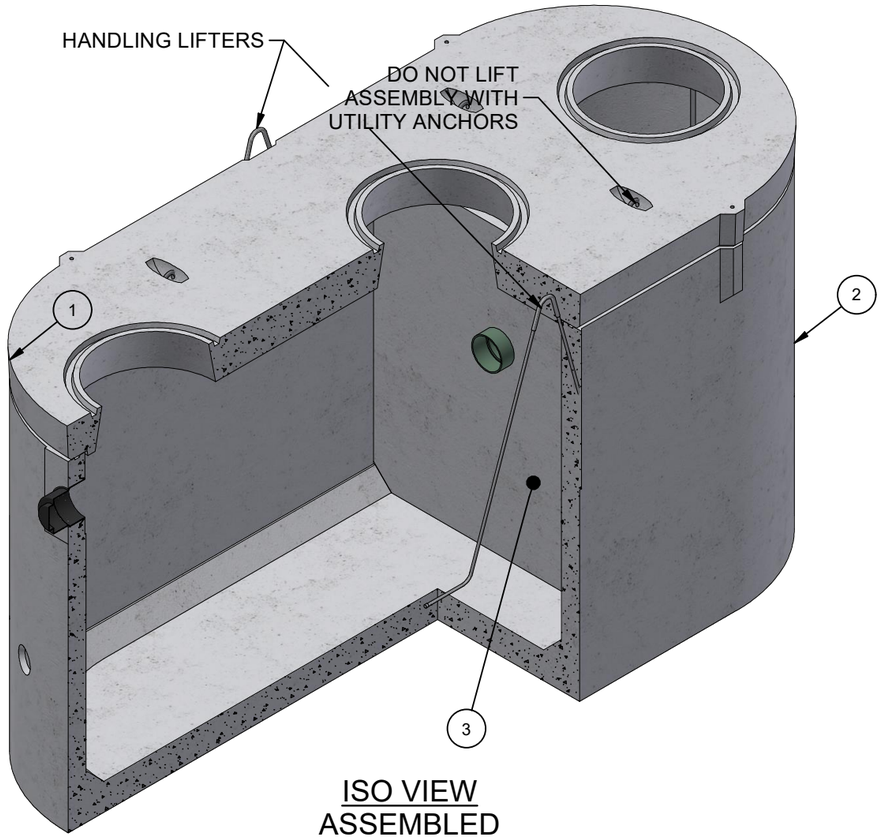

ISO VIEW
ASSEMBLED

200079484.idw

LIFTING NOTES
■ THIS CONCRETE PRODUCT IS DESIGNED TO BE LIFTED AT 2500 PSI WITH 2 LIFT CONNECTIONS EQUALLY LOADED TO 2 LIFTING POINTS AT A MINIMUM 60° SLING ANGLE, MEASURED FROM HORIZONTAL.
*All rigging shall be design by a qualified professional. Loading diagrams show illustrations of possible rigging setups to achieve the required sling angle and load leg equalization. Other valid rigging configurations are possible. A qualified professional must be consulted prior to lifting.

RIGGING DIAGRAM*	F

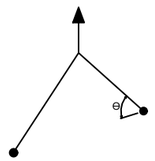

CHANGE HISTORY			
NO.	DESCRIPTION	DATE	BY
1	2208-54239	8/25/2023	DCH
2	BOOT SWAPPED TO 4/6 INCH	11/26/2024	MGL

BURY DEPTH:	1.1' - 6.0' to Top		
WATER LEVEL:	Below Structure	APPROX. WEIGHT:	18760 Lbs
DESIGN SPEC:	ACI 318,ASTM C890	LOADING SPEC:	A-16 (AASHTO HS20-44)
REINFORCEMENT TYPE:		LIFTING TYPE:	Cable

JENSEN PRECAST EST. 1968

WWW.JENSENPRECAST.COM

©2024 Jensen Precast- All rights reserved.
All materials appearing as Jensen Precast documents and the like are proprietary work product and are protected under U.S. copyright and other laws.
Unless in conjunction with business conducted with Jensen Precast, any use of Jensen Precast work product without express, written consent is prohibited, and recipient is prohibited from distributing any and all work product to non-approved third parties under penalty of civil action.

DESCRIPTION:	Tank JOP 1500 Gallon 4/6 Inch Assembly 24"E, 24"B, 24"E Single Baffle LAYOUT		REV: B-2
PART NUMBER:	200079484	DRAWN BY:	M. Lincoln
CREATED:	8/24/2023	MODIFIED:	11/26/2024
			SHEET: 1 OF 2

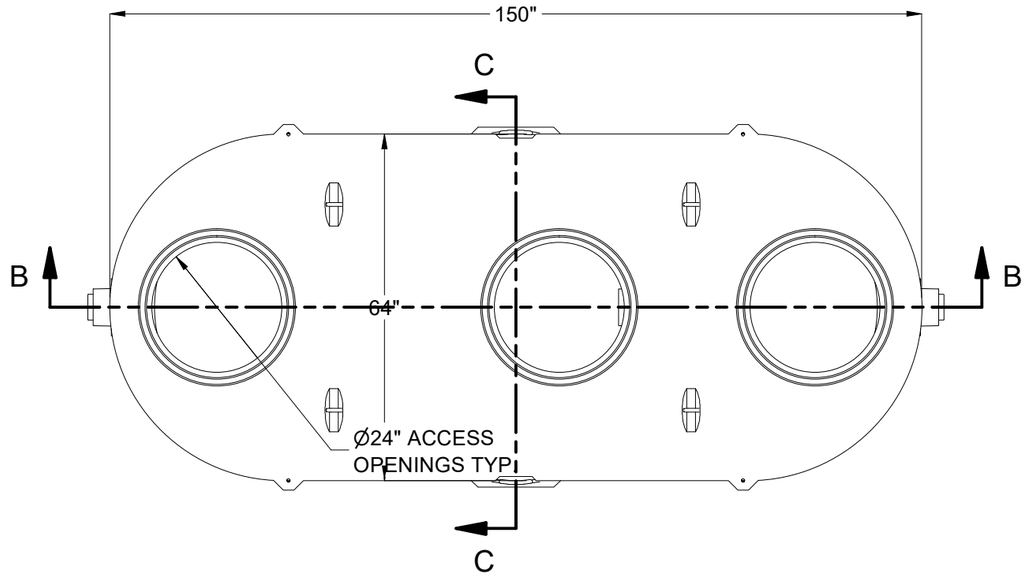

PLAN VIEW

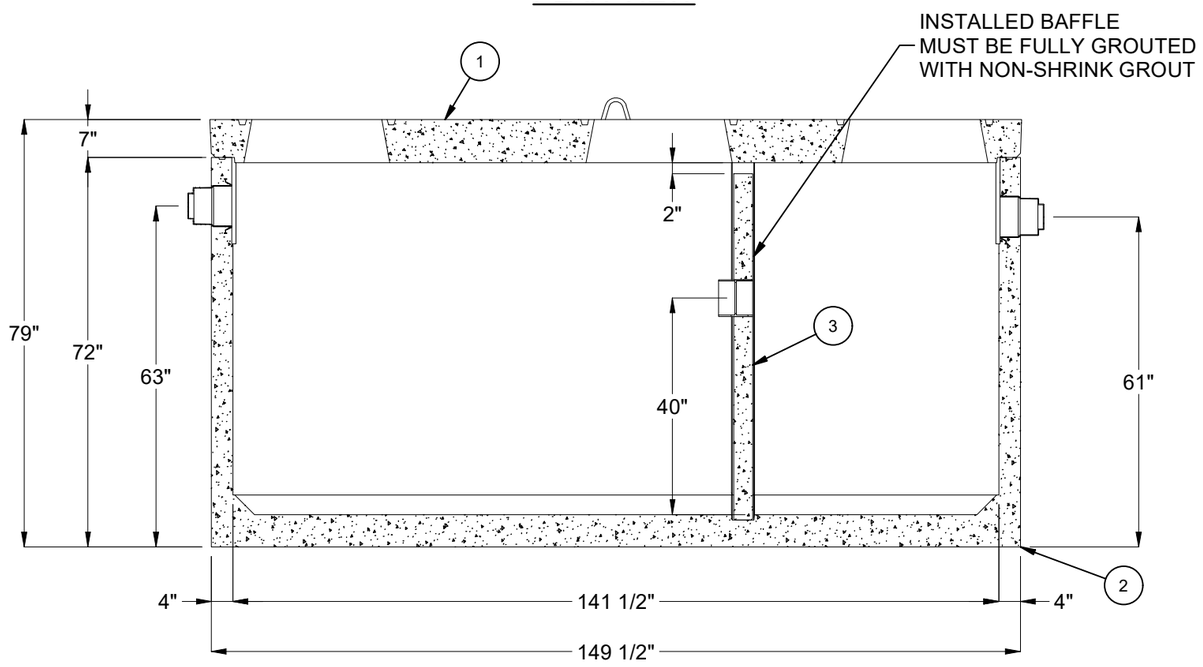

SECTION B-B

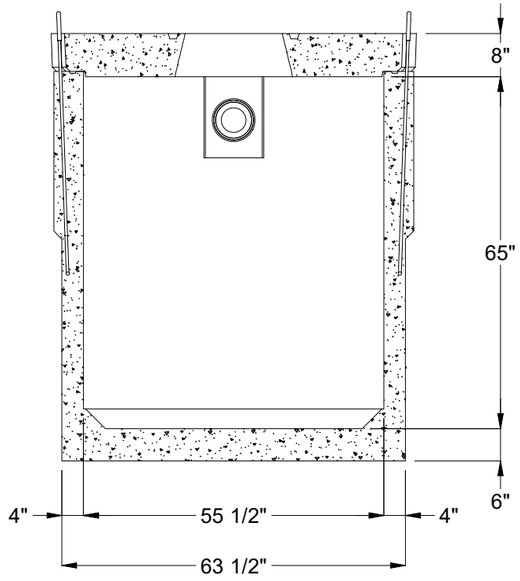

SECTION C-C

BURY DEPTH:	1.1' - 6.0' to Top		
WATER LEVEL:	Below Structure	APPROX. WEIGHT:	18760 Lbs
DESIGN SPEC:	ACI 318,ASTM C890	LOADING SPEC:	A-16 (AASHTO HS20-44)
REINFORCEMENT TYPE:		LIFTING TYPE:	Cable

JENSEN PRECAST EST. 1968

WWW.JENSENPRECAST.COM

©2024 Jensen Precast- All rights reserved.
All materials appearing as Jensen Precast documents and the like are proprietary work product and are protected under U.S. copyright and other laws.
Unless in conjunction with business conducted with Jensen Precast, any use of Jensen Precast work product without express, written consent is prohibited, and recipient is prohibited from distributing any and all work product to non-approved third parties under penalty of civil action.

DESCRIPTION:
Tank JOP 1500 Gallon 4/6 Inch Assembly 24"E, 24"B, 24"E Single Baffle
LAYOUT ASSEMBLY

PART NUMBER:	200079484	DRAWN BY:	M. Lincoln
CREATED:	8/24/2023	MODIFIED:	11/26/2024

REV: B-2

SHEET: 2 OF 2

200079484.idw