DESIGN NOTES
■ FOR COMPLETE DESIGN AND PRODUCT INFORMATION CONTACT JENSEN PRECAST.

BILL OF MATERIALS

ITEM	QTY	PART NUMBER	DESCRIPTION
1	1	200079003	Riser 1736x4 Tacoma Power
2	1	200079006	Riser 2536x4 Tacoma Power

200079017.idw

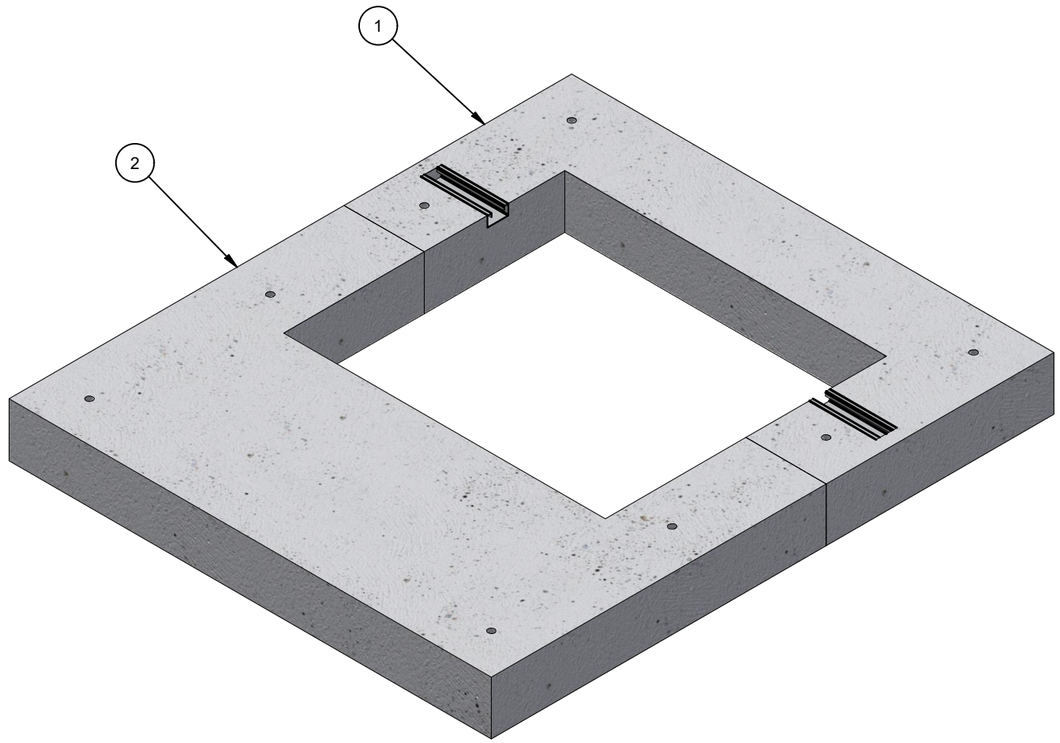

ISO LAYOUT

CHANGE HISTORY			
NO.	DESCRIPTION	DATE	BY
A	DRAWING CREATED	8/14/2023	E.Fine

BURY DEPTH:	0.0' - 0.0' to Top		
WATER LEVEL:	3.0'	APPROX. WEIGHT:	351.04 Lbs
DESIGN SPEC:	ACI 318,ASTM C857	LOADING SPEC:	A-03 (300 psf)
AGENCY:	Tacoma Power	AGENCY SPEC:	60729

JENSEN PRECAST EST. 1968

WWW.JENSENPRECAST.COM

©2024 Jensen Precast- All rights reserved.
All materials appearing as Jensen Precast documents and the like are proprietary work product and are protected under U.S. copyright and other laws.
Unless in conjunction with business conducted with Jensen Precast, any use of Jensen Precast work product without express, written consent is prohibited, and recipient is prohibited from distributing any and all work product to non-approved third parties under penalty of civil action.

DESCRIPTION:	Vault Layout 3642x5 21"x24"E Tacoma Power 60729 LAYOUT REVIEW		REV: A-4
PART NUMBER:	200079017	DRAWN BY:	E.Fine
CREATED:	8/14/2023	MODIFIED:	6/21/2024
			SHEET: 1 OF 2

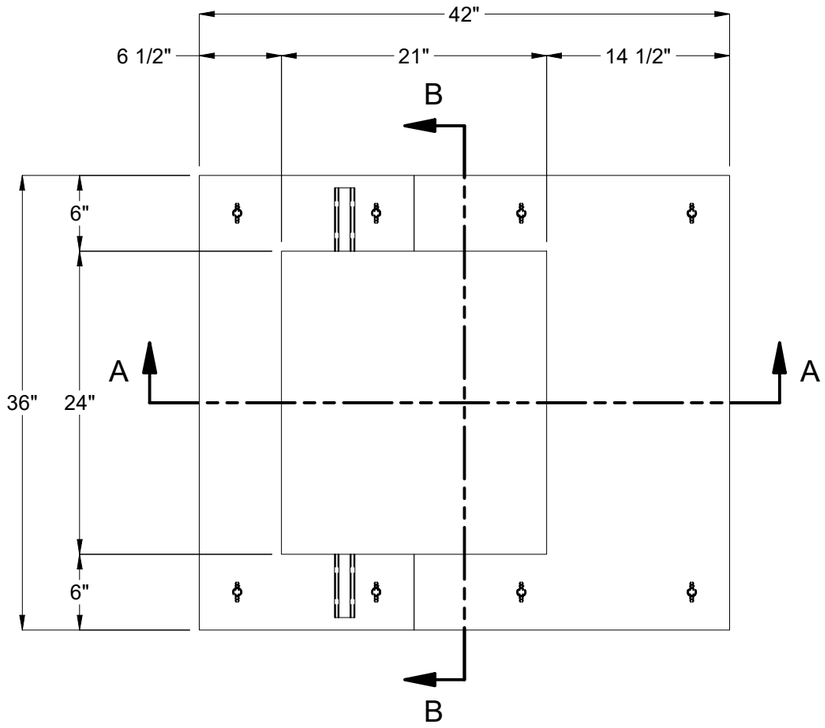

PLAN VIEW

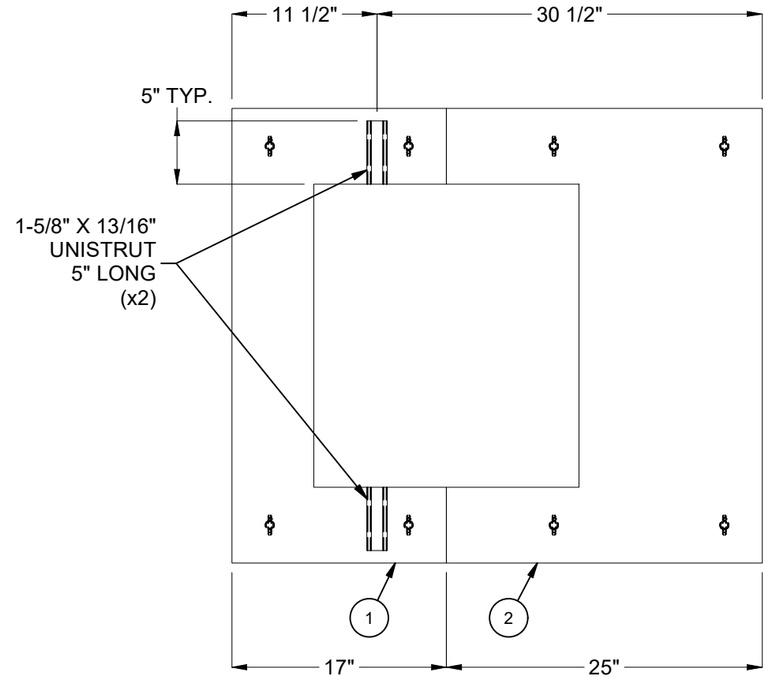

PLAN VIEW
(SHOWING OBJECT DIMENSIONS)

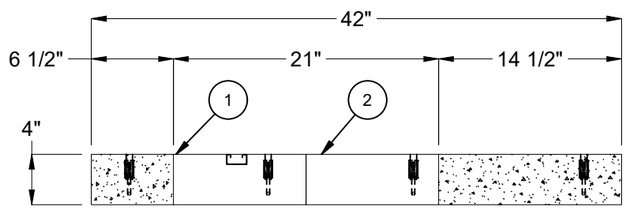

SECTION A-A

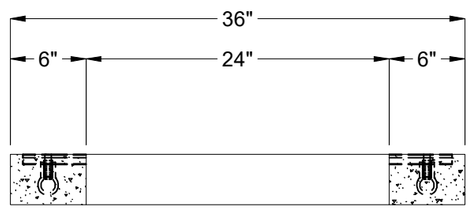

SECTION B-B

BURY DEPTH:	0.0' - 0.0' to Top		
WATER LEVEL:	3.0'	APPROX. WEIGHT:	351.04 Lbs
DESIGN SPEC:	ACI 318,ASTM C857	LOADING SPEC:	A-03 (300 psf)
AGENCY:	Tacoma Power	AGENCY SPEC:	60729

JENSEN PRECAST EST. 1968

WWW.JENSENPRECAST.COM

©2024 Jensen Precast- All rights reserved.
All materials appearing as Jensen Precast documents and the like are proprietary work product and are protected under U.S. copyright and other laws.
Unless in conjunction with business conducted with Jensen Precast, any use of Jensen Precast work product without express, written consent is prohibited, and recipient is prohibited from distributing any and all work product to non-approved third parties under penalty of civil action.

DESCRIPTION:	Vault Layout 3642x5 21"x24"E Tacoma Power 60729 LAYOUT DRAWING		REV: A-4
PART NUMBER:	200079017	DRAWN BY:	E.Fine
CREATED:	8/14/2023	MODIFIED:	6/21/2024
			SHEET: 2 OF 2

200079017.idw