DESIGN NOTES:

- CONCRETE SHALL HAVE A 28 DAY MINIMUM COMPRESSIVE STRENGTH OF 6000 PSI
- SOIL UNIT WEIGHT DRY - 110 lbs/cu.ft.
- EQUIVALENT LATERAL PRESSURE DRY - 40 lbs/cu.ft.
- SOIL UNIT WEIGHT WET - 120 lbs/cu.ft.
- EQUIVALENT LATERAL PRESSURE WET - 80 lbs/cu.ft.

PRODUCTION NOTES:

- THIS PRODUCT SHALL ONLY BE PRODUCED IN A JENSEN INFRASTRUCTURE FACILITY
- LIFTING INSERTS SHALL BE INSTALLED PER MANUFACTURER'S REQUIREMENTS
- APPLIED FINISH - BROOMED
- INTERNAL LINER/COATING - NONE
- EXTERNAL LINER/COATING - NONE

BILL OF MATERIALS

ITEM	QTY	PART NUMBER	DESCRIPTION
1	63.950 ft^3	100011427	CONCRETE MIX GENERIC 6000 PSI
2	1	200079294	CAB1-3333-CH4-DP-G-SL-OH07-PNW-332
3	4	100044113	ANCHOR RAPID LIFT TECH 5T CLUTCH 4.4375IN LONG MB RL-25 GALV
4	2	100044139	GROUND INSERT BOTTLE ROCKET 1/2-13 BRONZE w/ 90DEG 0.375x16" STEEL ROD
5	1	300153830	REINFORCING MAT 300153830

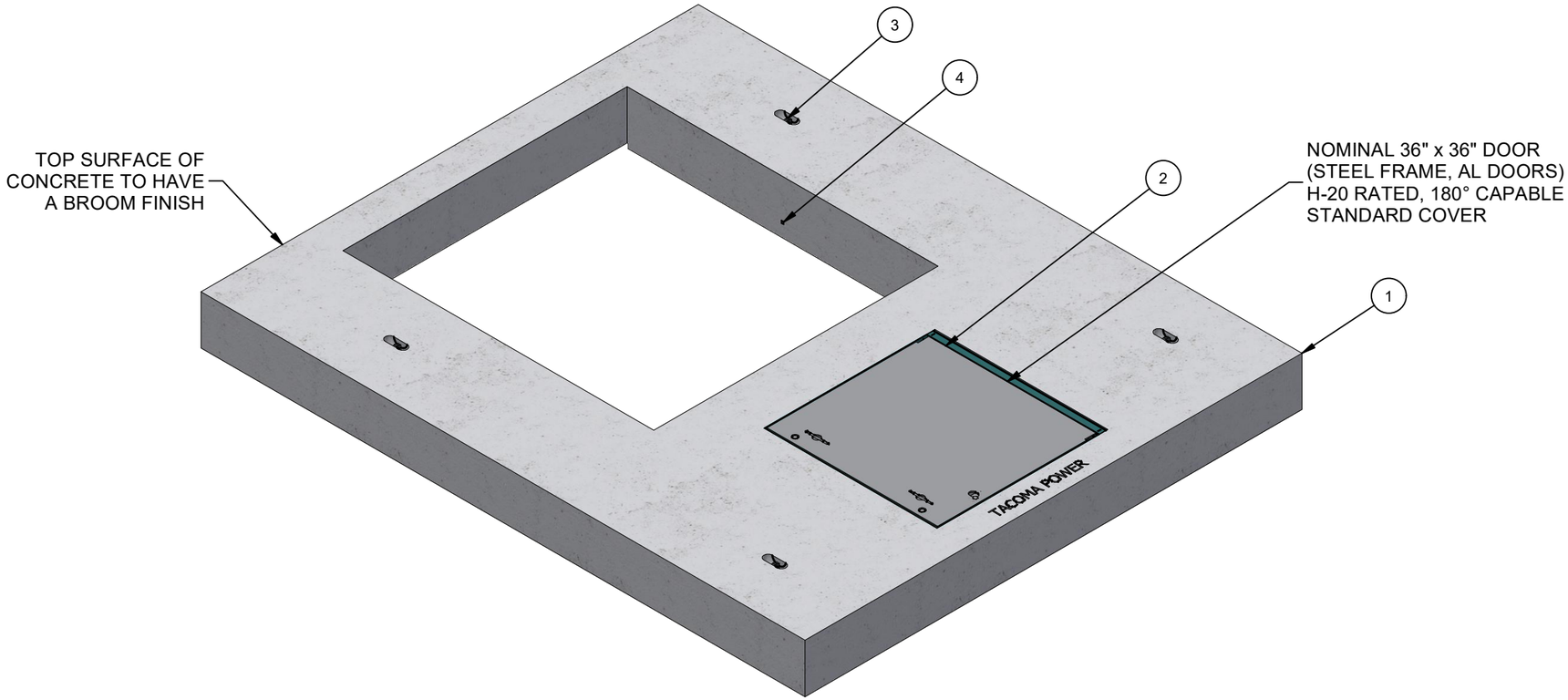

ISO VIEW

LIFTING NOTES
■ INSTALLATION: THIS CONCRETE PRODUCT IS DESIGNED TO BE LIFTED AT 5000 PSI WITH 4 LIFT CONNECTIONS EQUALLY LOADED TO 2 LIFTING POINTS AT A MINIMUM 60° SLING ANGLE, MEASURED FROM HORIZONTAL.
■ DEMOLDING: THIS CONCRETE PRODUCT IS DESIGNED TO BE LIFTED AT 2500 PSI WITH 4 LIFT CONNECTIONS EQUALLY LOADED TO 4 LIFTING POINTS AT A MINIMUM 60° SLING ANGLE, MEASURED FROM HORIZONTAL.
*All rigging shall be design by a qualified professional. Loading diagrams show illustrations of possible rigging setups to achieve the required sling angle and load leg equalization. Other valid rigging configurations are possible. A qualified professional must be consulted prior to lifting.

RIGGING DIAGRAMS*

INSTALLATION	B	DEMOLDING	C

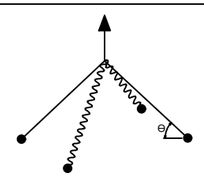

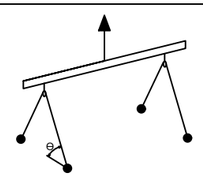

BURY DEPTH:	0.0' - 0.5' to Top		
WATER LEVEL:	Below Structure	APPROX. WEIGHT:	9804.86 Lbs
DESIGN SPEC:	ACI 318,ASTM C857	LOADING SPEC:	A-16 (AASHTO HS20-44)
REINFORCEMENT TYPE:	Rebar	LIFTING TYPE:	Tech Erection Anchor

Infrastructure
JENSEN
WWW.JENSENINFRASTRUCTURE.COM

©2026 Jensen Infrastructure - All rights reserved.
All materials appearing as Jensen Infrastructure documents and the like are proprietary work product and are protected under U.S. copyright and other laws.
Unless in conjunction with business conducted with Jensen Infrastructure , any use of Jensen Infrastructure work product without express, written consent is prohibited, and recipient is prohibited from distributing any and all work product to non-approved third parties under penalty of civil action.
This product shall only be produced in a Jensen Infrastructure facility.

CHANGE HISTORY

NO.	DESCRIPTION	DATE	BY
A	DRAWING CREATED	8/11/2023	E.Fine
B	UPDATED BONDING BAR BOM LEVEL	9/21/2026	SQ

DESCRIPTION: Vault 96120x12 Slab Top 33"x33"E, 64"x70"E Cast-In Frame and Cover Tacoma Power 63354 STD CASTING LAYOUT

REV: B-1

PART NUMBER:	200078898	DRAWN BY:	E.Fine
CREATED:	8/11/2023	MODIFIED:	10/16/2026

SHEET: 1 OF 3

200078898.idw

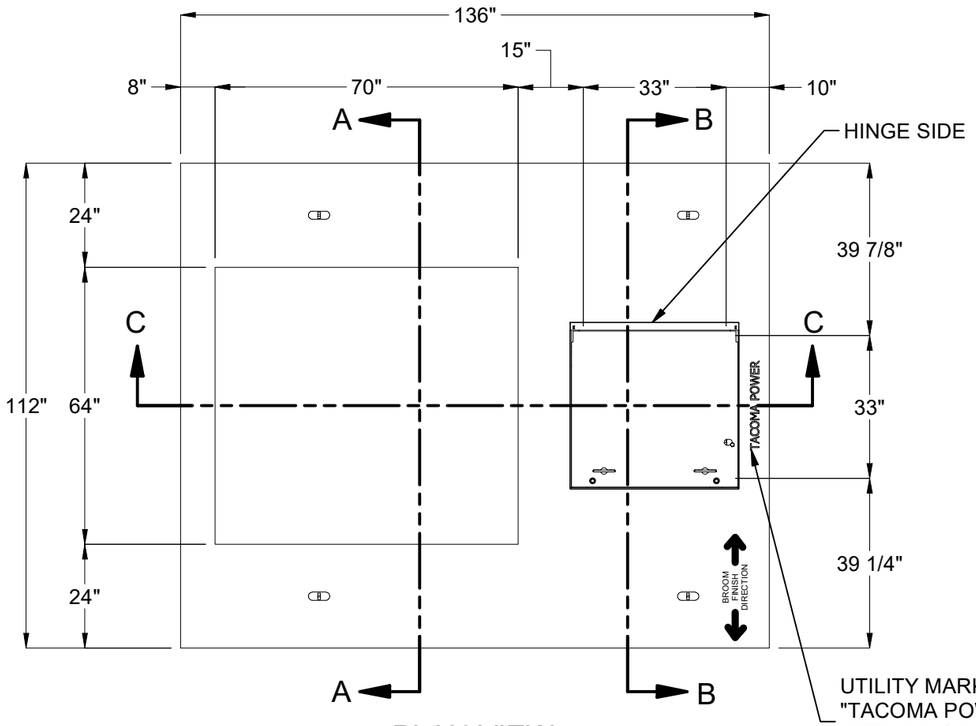

PLAN VIEW

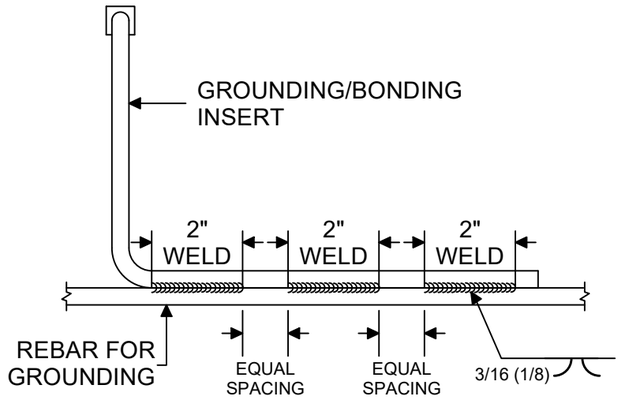

CONNECTION DETAIL

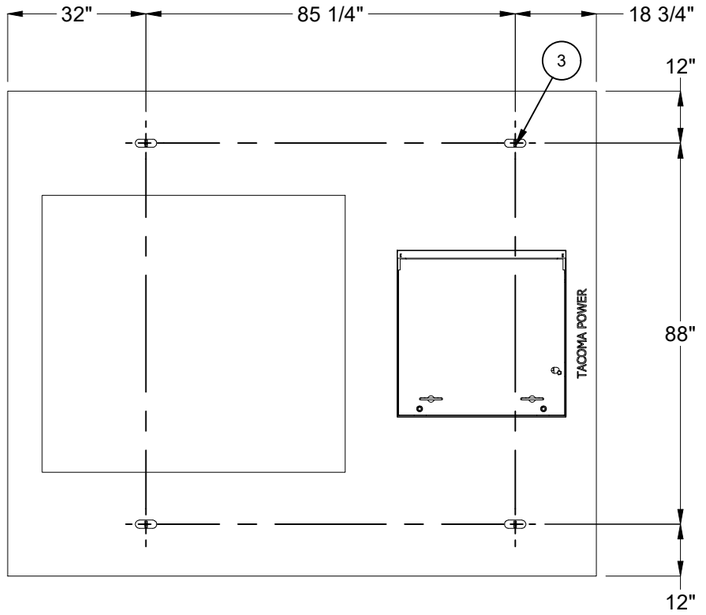

PLAN VIEW
(SHOWING LIFTING)

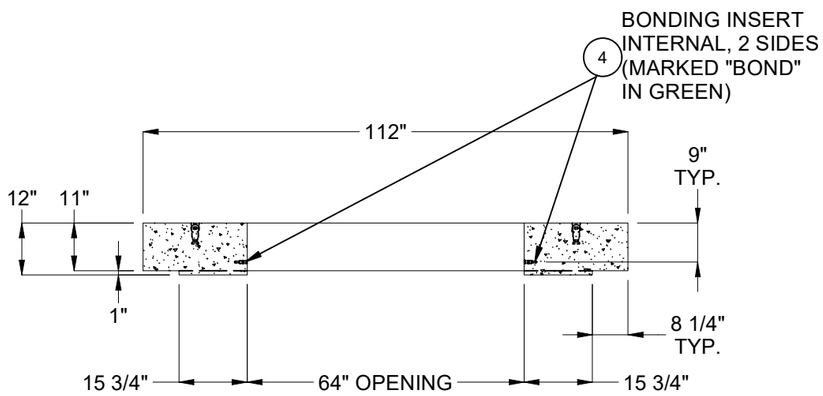

SECTION A-A

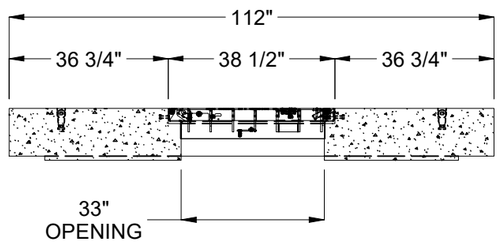

SECTION B-B

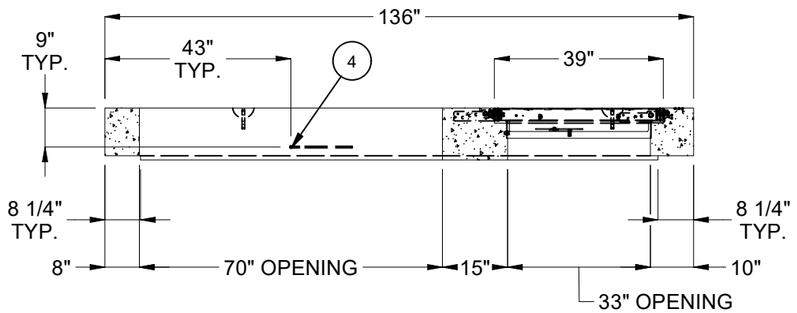

SECTION C-C

BURY DEPTH:	0.0' - 0.5' to Top		
WATER LEVEL:	Below Structure	APPROX. WEIGHT:	9804.86 Lbs
DESIGN SPEC:	ACI 318,ASTM C857	LOADING SPEC:	A-16 (AASHTO HS20-44)
REINFORCEMENT TYPE:	Rebar	LIFTING TYPE:	Tech Erection Anchor

Infrastructure
JENSEN
WWW.JENSENINFRASTRUCTURE.COM

©2026 Jensen Infrastructure - All rights reserved.
All materials appearing as Jensen Infrastructure documents and the like are proprietary work product and are protected under U.S. copyright and other laws.
Unless in conjunction with business conducted with Jensen Infrastructure , any use of Jensen Infrastructure work product without express, written consent is prohibited, and recipient is prohibited from distributing any and all work product to non-approved third parties under penalty of civil action.
This product shall only be produced in a Jensen Infrastructure facility.

DESCRIPTION:	Vault 96120x12 Slab Top 33"x33"E, 64"x70"E Cast-In Frame and Cover Tacoma Power 63354 STD CASTING DRAWING		REV: B-1
PART NUMBER:	200078898	DRAWN BY:	E.Fine
CREATED:	8/11/2023	MODIFIED:	10/16/2026
			SHEET: 2 OF 3

200078898.idw

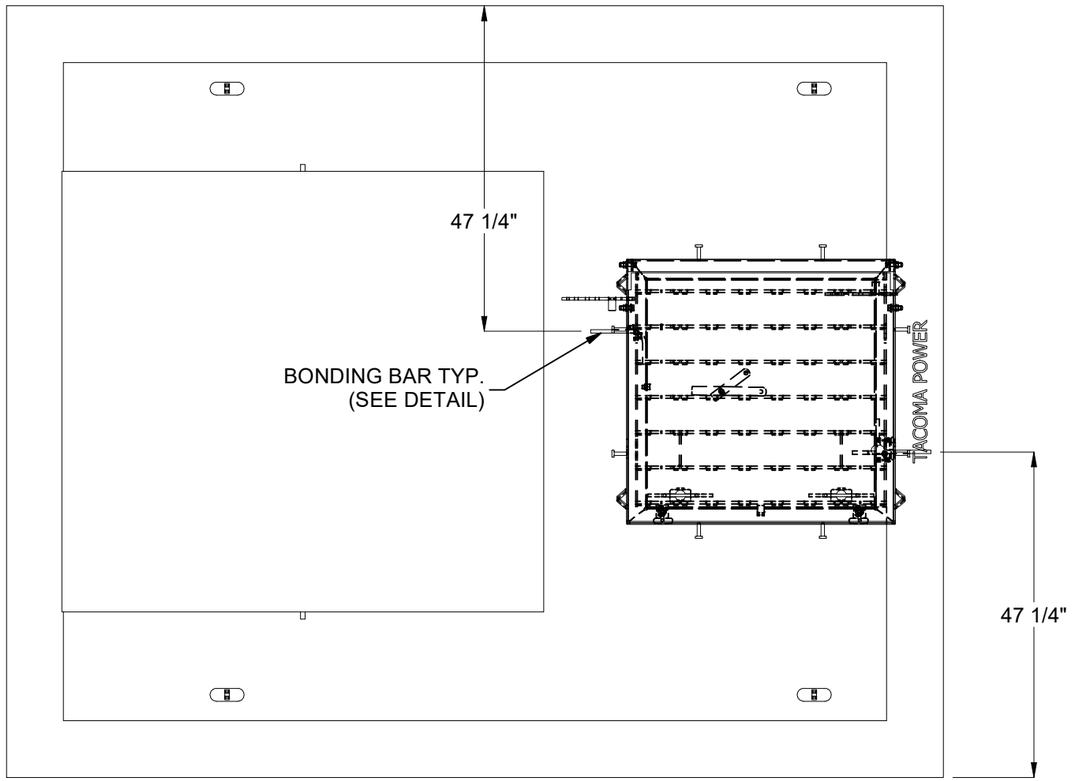

PLAN VIEW
(SHOWING BONDING BAR(S)
AND HATCH FOR CLARITY)

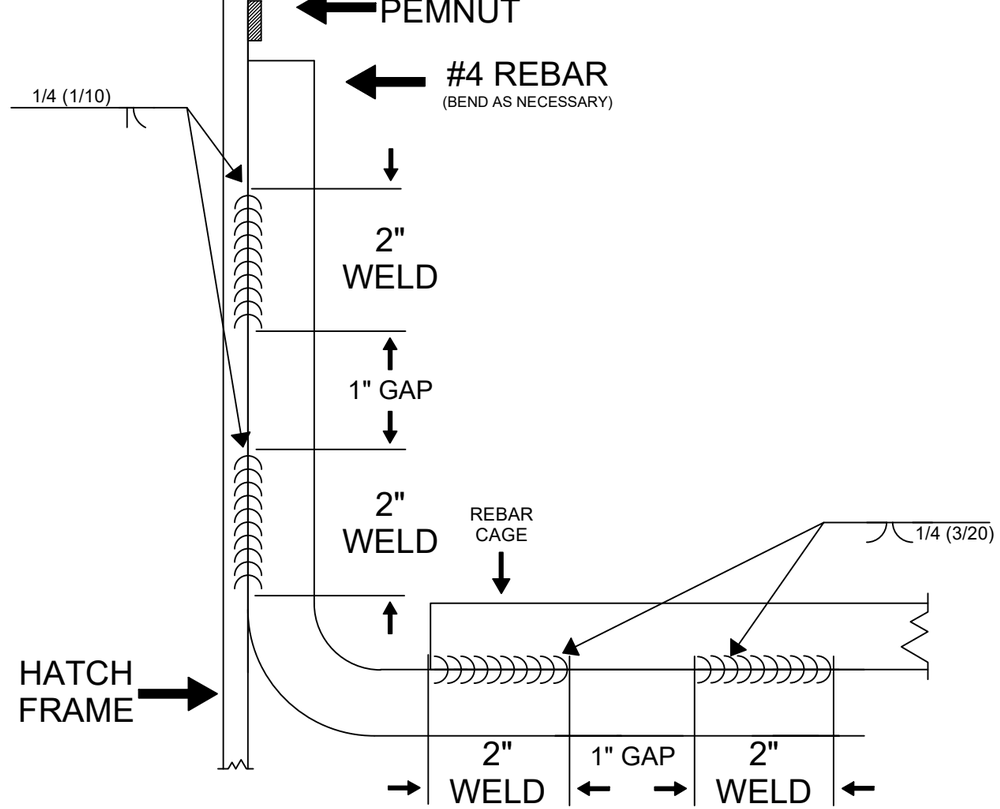

BONDING DETAIL

BURY DEPTH:	0.0' - 0.5' to Top			DESCRIPTION: Vault 96120x12 Slab Top 33"x33"E, 64"x70"E Cast-In Frame and Cover Tacoma Power 63354 STD CASTING DRAWING	REV: B-1
WATER LEVEL:	Below Structure	APPROX. WEIGHT:	9804.86 Lbs		
DESIGN SPEC:	ACI 318,ASTM C857	LOADING SPEC:	A-16 (AASHTO HS20-44)		
REINFORCEMENT TYPE:	Rebar	LIFTING TYPE:	Tech Erection Anchor	PART NUMBER: 200078898 / DRAWN BY: E.Fine	SHEET: 3 OF 3
				CREATED: 8/11/2023 / MODIFIED: 10/16/2026	

Infrastructure
JENSEN
WWW.JENSENINFRASTRUCTURE.COM

©2026 Jensen Infrastructure - All rights reserved.
All materials appearing as Jensen Infrastructure documents and the like are proprietary work product and are protected under U.S. copyright and other laws.
Unless in conjunction with business conducted with Jensen Infrastructure , any use of Jensen Infrastructure work product without express, written consent is prohibited, and recipient is prohibited from distributing any and all work product to non-approved third parties under penalty of civil action.
This product shall only be produced in a Jensen Infrastructure facility.

200078898.idw