NOTES
■ FOR COMPLETE DESIGN AND PRODUCT INFORMATION CONTACT JENSEN PRECAST.

BILL OF MATERIALS

ITEM	UNIT QTY	QTY	PART NUMBER	DESCRIPTION
1	62.152 ft^3	62.152 ft^3	100011427	CONCRETE MIX GENERIC 6000 PSI
2	1	4	100044243	GROUND INSERT BOTTLE ROCKET 1/2-13 BRONZE w/ 90DEG 0.375x36" STEEL ROD
3	1	4	100040446	ANCHOR RAPID LIFT TECH 5T CLUTCH 3.4375IN LONG MB RL-25
4	1	20	100044110	ANCHOR RAPID LIFT TECH 5T CLUTCH 3.4375IN LONG MB RL-25 GALV
5	1	1	100041711	GRATE 1636 STEEL GALV 19-W-4 GRATING PACIFIC
6	48.0000 in	192.0000 in	100003048	STRUT C-CHANNEL 13/16 X 1-5/8 14GA SOLID GALV SHALLOW
7	24.0000 in	96.0000 in	100003048	STRUT C-CHANNEL 13/16 X 1-5/8 14GA SOLID GALV SHALLOW
8	1	1	300153799	REINFORCING MAT 300153799
9	1	1	300153798	REINFORCING MAT 300153798

200078895.idw

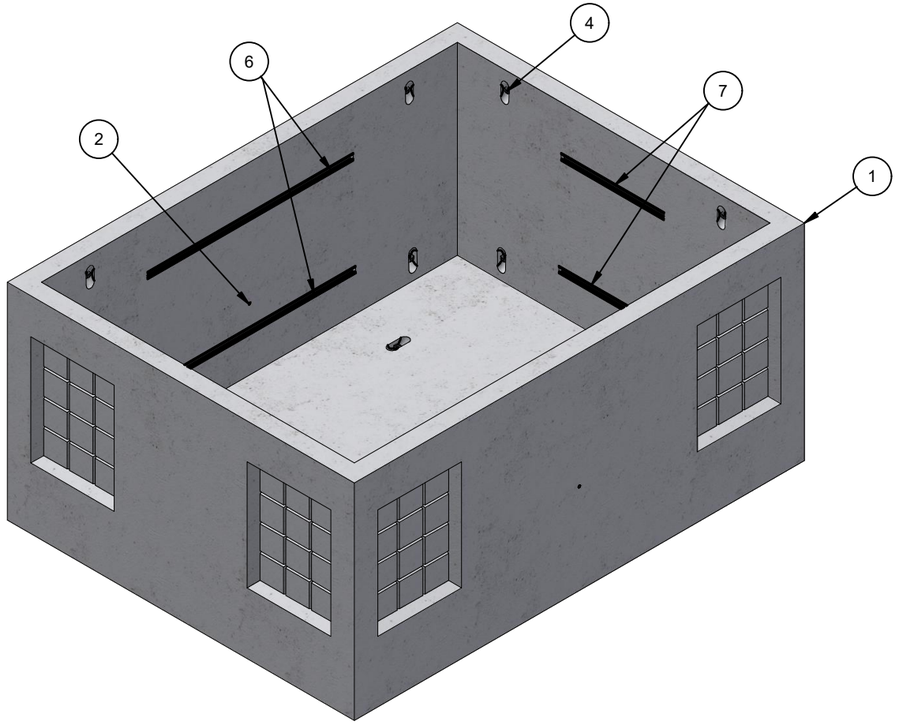

ISO VIEW

LIFTING NOTES
■ THIS CONCRETE PRODUCT IS DESIGNED TO BE LIFTED AT 2500 PSI WITH 4 LIFT CONNECTIONS EQUALLY LOADED TO 4 LIFTING POINTS AT A MINIMUM 60° SLING ANGLE, MEASURED FROM HORIZONTAL.
*All rigging shall be design by a qualified professional. Loading diagrams show illustrations of possible rigging setups to achieve the required sling angle and load leg equalization. Other valid rigging configurations are possible. A qualified professional must be consulted prior to lifting.

RIGGING DIAGRAM*	C

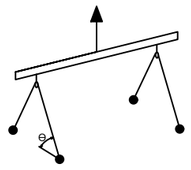

BURY DEPTH:	0.7' - 1.3' to Top		
WATER LEVEL:	3.0'	APPROX. WEIGHT:	9540.87 Lbs
DESIGN SPEC:	ACI 318,ASTM C857	LOADING SPEC:	A-16 (AASHTO HS20-44)
REINFORCEMENT TYPE:	Rebar	LIFTING TYPE:	Tech Erection Anchor

JENSEN PRECAST EST. 1968

WWW.JENSENPRECAST.COM

©2024 Jensen Precast- All rights reserved.
All materials appearing as Jensen Precast documents and the like are proprietary work product and are protected under U.S. copyright and other laws.
Unless in conjunction with business conducted with Jensen Precast, any use of Jensen Precast work product without express, written consent is prohibited, and recipient is prohibited from distributing any and all work product to non-approved third parties under penalty of civil action.

CHANGE HISTORY			
NO.	DESCRIPTION	DATE	BY
A	DRAWING CREATED	2/23/2023	E.Fine

DESCRIPTION:	Vault 7296x42 Rect. Bottom Section Knockout Sump Tacoma Power 21169 CASTING LAYOUT		REV: A-7
PART NUMBER:	200078895	DRAWN BY:	E.Fine
CREATED:	8/10/2023	MODIFIED:	3/26/2024
			SHEET: 1 OF 2

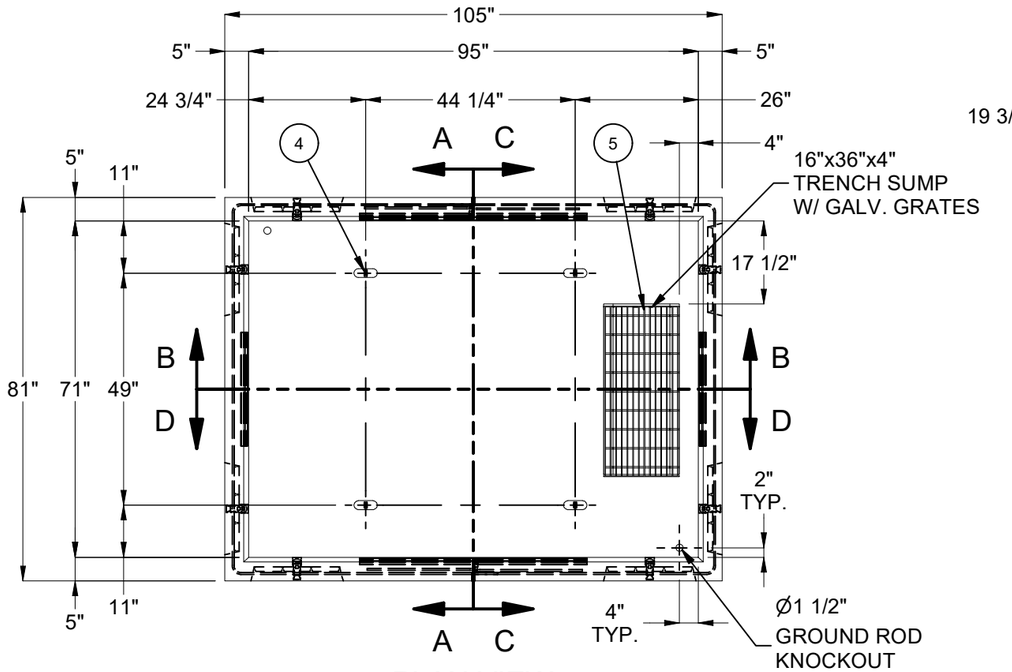

PLAN VIEW
(SHOWING HANDLING LIFTERS)

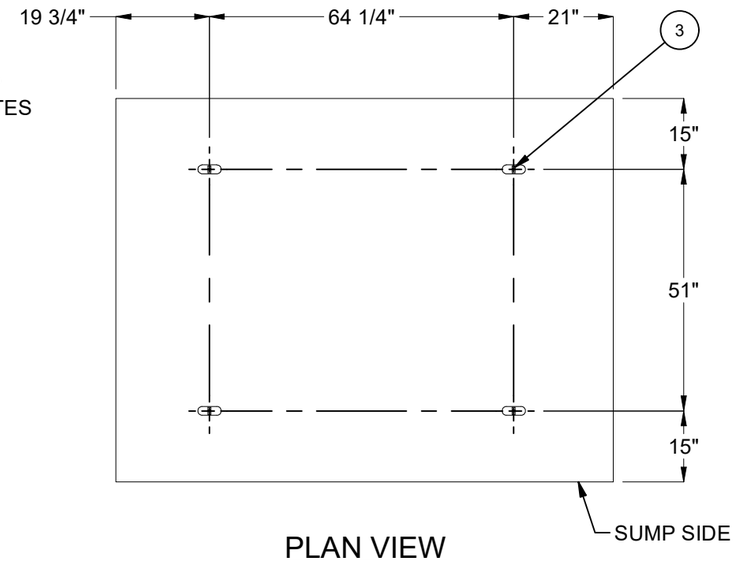

PLAN VIEW
(SHOWING DEMOLDING LIFTERS)

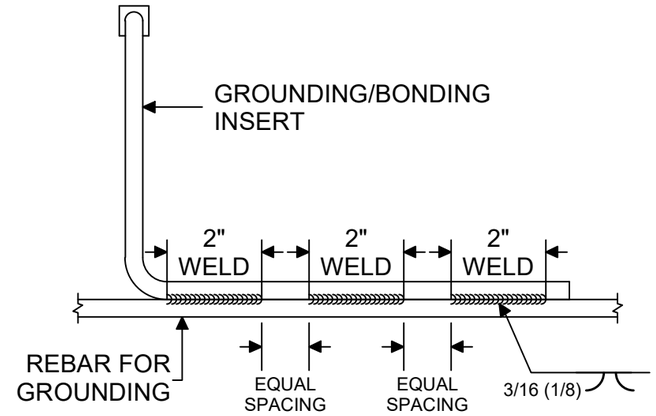

DETAIL 1

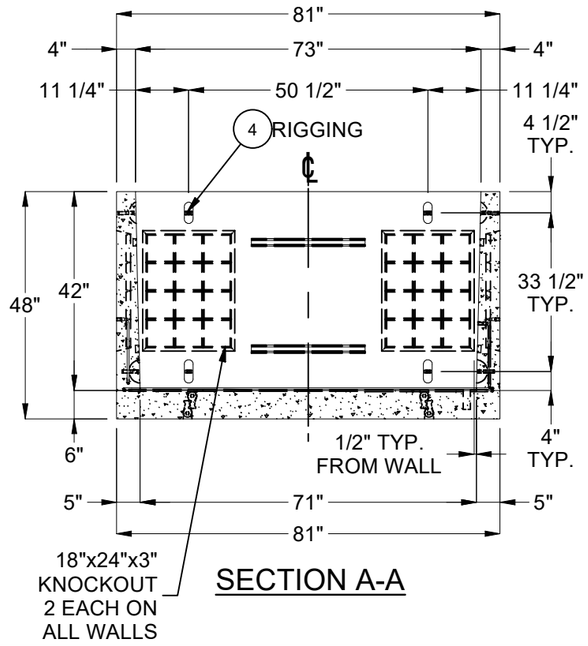

SECTION A-A

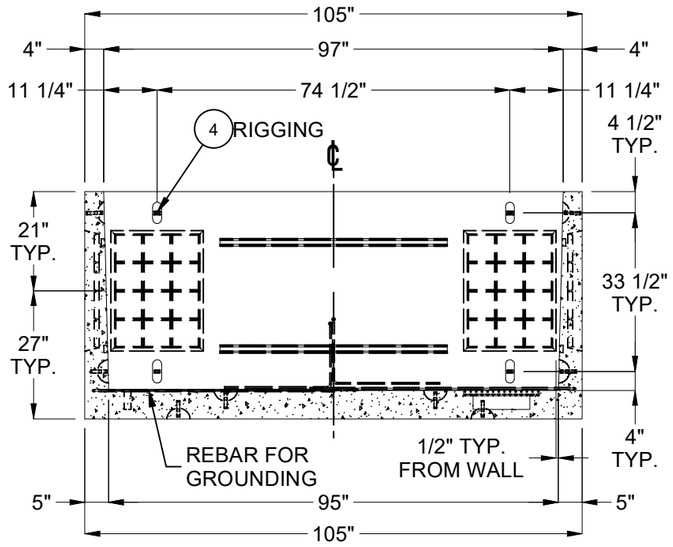

SECTION B-B

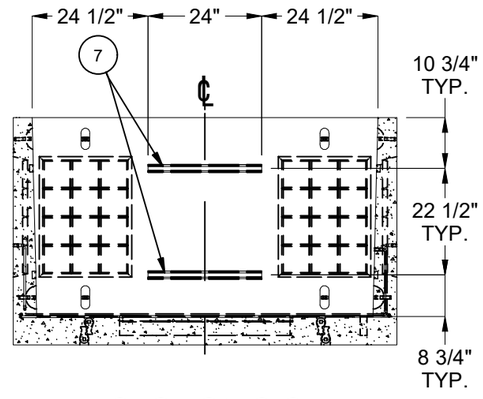

SECTION C-C

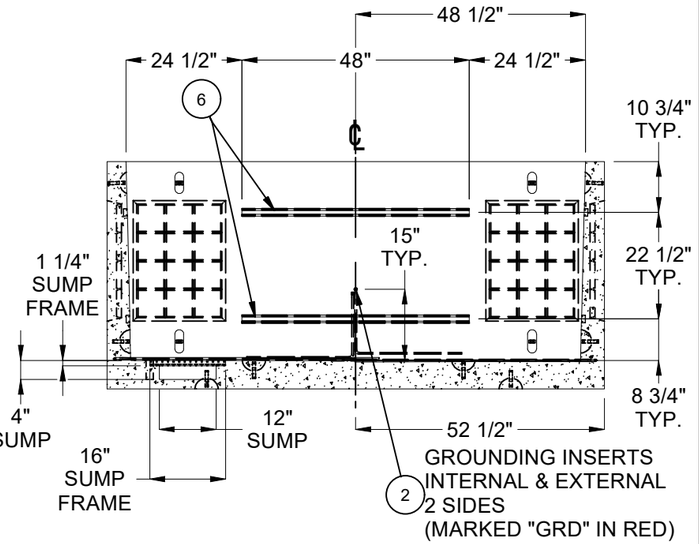

SECTION D-D

BURY DEPTH:	0.7' - 1.3' to Top		
WATER LEVEL:	3.0'	APPROX. WEIGHT:	9540.87 Lbs
DESIGN SPEC:	ACI 318,ASTM C857	LOADING SPEC:	A-16 (AASHTO HS20-44)
REINFORCEMENT TYPE:	Rebar	LIFTING TYPE:	Tech Erection Anchor

JENSEN PRECAST EST. 1968

WWW.JENSENPRECAST.COM

©2024 Jensen Precast- All rights reserved.
All materials appearing as Jensen Precast documents and the like are proprietary work product and are protected under U.S. copyright and other laws.
Unless in conjunction with business conducted with Jensen Precast, any use of Jensen Precast work product without express, written consent is prohibited, and recipient is prohibited from distributing any and all work product to non-approved third parties under penalty of civil action.

DESCRIPTION:
Vault 7296x42 Rect. Bottom Section Knockout Sump Tacoma Power 21169
CASTING DRAWING

REV: A-7

SHEET: 2 OF 2

PART NUMBER:	200078895	DRAWN BY:	E.Fine
CREATED:	8/10/2023	MODIFIED:	3/26/2024

200078895.idw