BILL OF MATERIALS

ITEM	ITEM QTY	QTY	PART NUMBER	DESCRIPTION	PART NAME
1	1	1	200087375	HT2436-306-L01-R-BD-NP	200087375

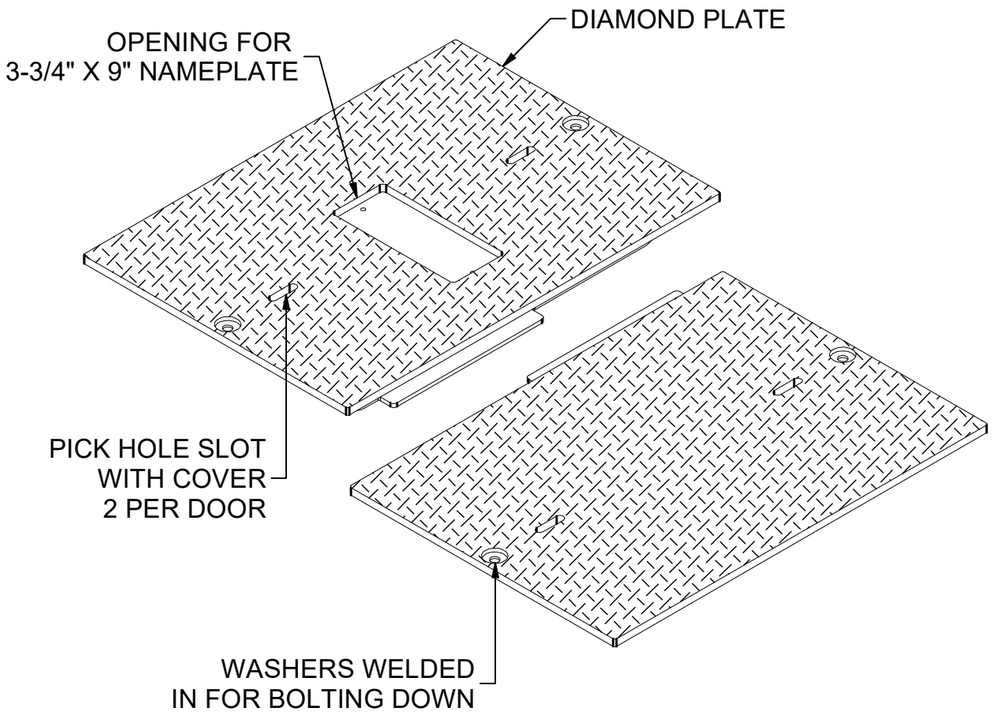

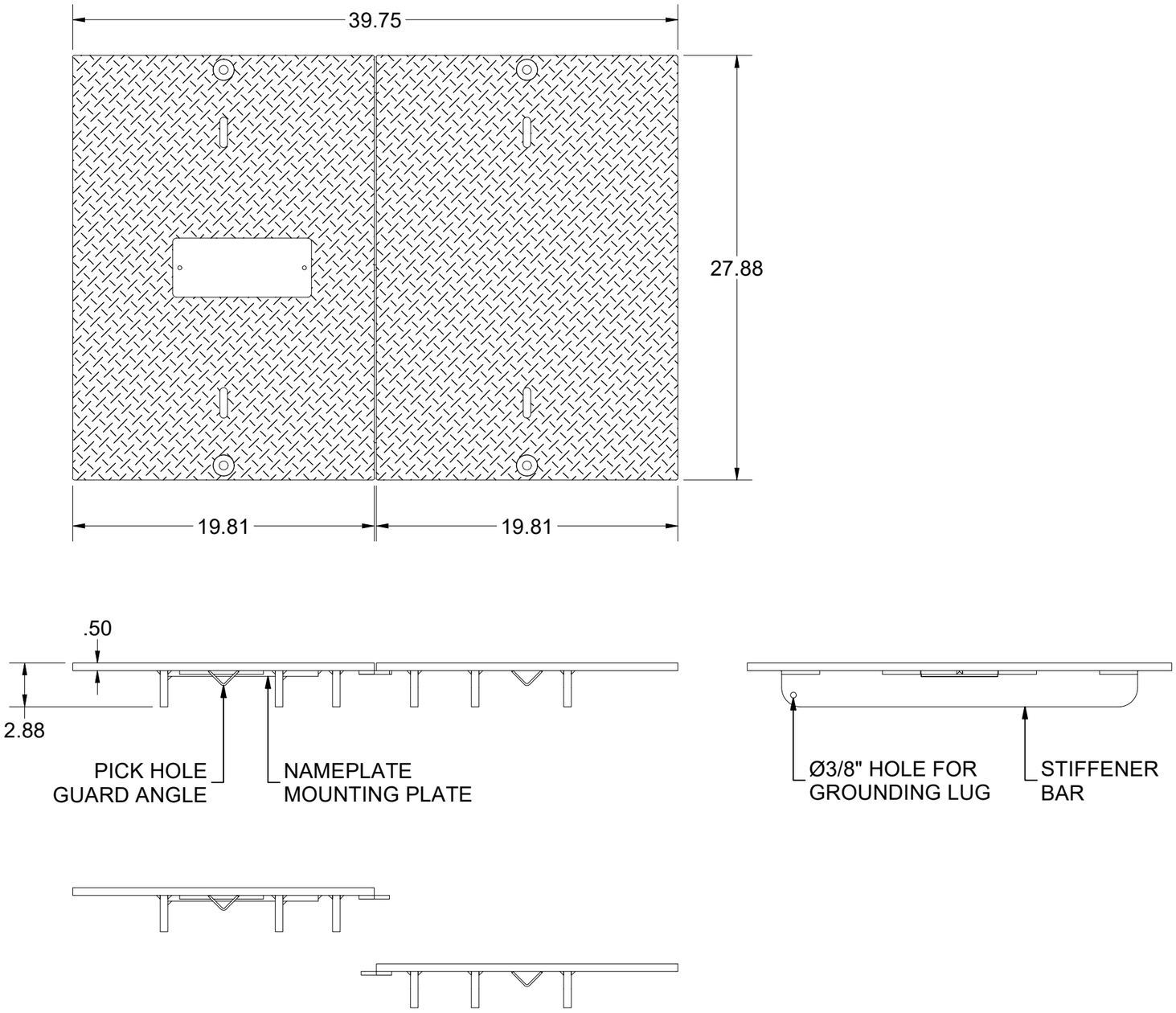

HALF OPEN VIEW

200078830.idw

LOADING CRITERIA: AASHTO M306

Test proof load of 40,000 lbs on 9"x9" footprint per AASHTO M306 for HS-20 loading

SURFACE:	Diamond Plate	FINISH:	Galvanized
WEIGHT:	226.32 lbs	MARKING:	As Noted

JENSEN METALTECH
450 E. GLENDALE AVE. SPARKS. NV 89431
775-352-2716 FAX: 755-358-8127
JENSENMETALTECH.COM

©2025 Jensen Precast- All rights reserved. All materials appearing as Jensen Precast documents and the like are proprietary work product and are protected under U.S. copyright and other laws. Unless in conjunction with business conducted with Jensen Precast, any use of Jensen Precast work product without express, written consent is prohibited, and recipient is prohibited from distributing any and all work product to non-approved third parties under penalty of civil action.

DESCRIPTION: HT2436-306-L01-G-BD-NP

24x36 Handhole Cover Assembly (Loading Criteria Per AASHTO M306, Steel, Drop In, Pickhole, Diamond Plate, Galvanized) 03

PART NUMBER:	200078830	DRAWN BY:	M. Newman
CREATED:	8/15/2023	MODIFIED:	2/4/2025

REV: A-2-2

SHEET: 1

BILL OF MATERIALS

ITEM	ITEM QTY	QTY	PART NUMBER	DESCRIPTION	PART NAME
1	1	1	200087375	HT2436-306-L01-R-BD-NP	200087375

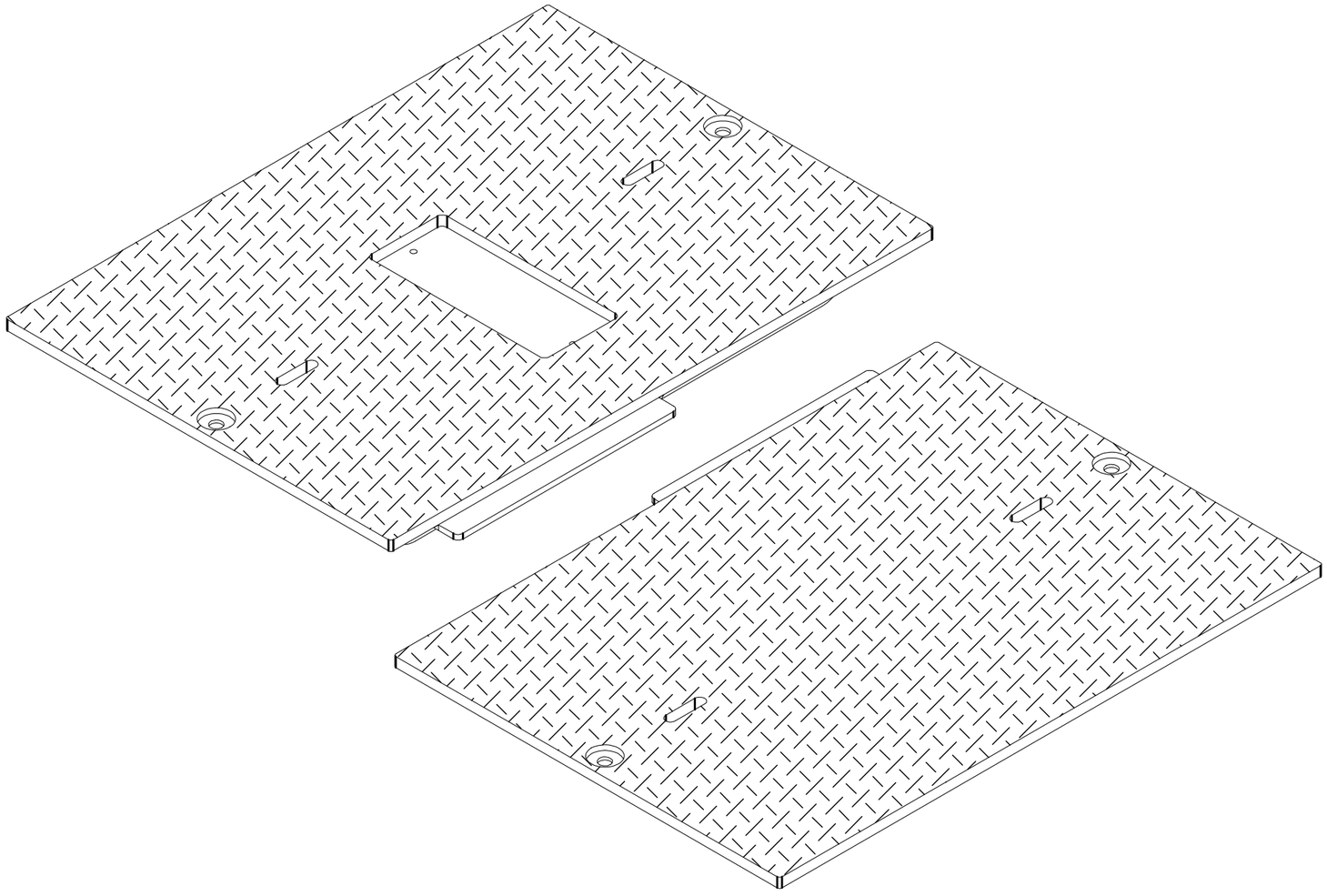

200078830.idw

REVISION HISTORY	
DESCRIPTION	DATE
SPLIT OFF RAW ASSEMBLY FROM GALVANIZED ASSEMBLY PRINT PACK	2/4/2025

MATERIAL FINISH: Galvanized

MATERIAL SURFACE: Diamond Plate

JENSEN METALTECH
450 E. GLENDALE AVE. SPARKS. NV 89431
775-352-2716 FAX: 755-358-8127
JENSENMETALTECH.COM

©2025 Jensen Precast- All rights reserved.
All materials appearing as Jensen Precast documents and the like are proprietary work product and are protected under U.S. copyright and other laws.
Unless in conjunction with business conducted with Jensen Precast, any use of Jensen Precast work product without express, written consent is prohibited, and recipient is prohibited from distributing any and all work product to non-approved third parties under penalty of civil action.

PART NUMBER & DESCRIPTION: 200078830 HT2436-306-L01-G-BD-NP

REV: A-2-2

WEIGHT: 226.32 Lbs

DRAWN BY: M. Newman

CREATED: 8/15/2023

MODIFIED: 2/4/2025

SHEET: 2