NOTES

- FOR COMPLETE DESIGN AND PRODUCT INFORMATION CONTACT JENSEN PRECAST.

BILL OF MATERIALS

ITEM	UNIT QTY	QTY	PART NUMBER	DESCRIPTION
1	64.246 ft^3	64.246 ft^3	100011427	CONCRETE MIX GENERIC 6000 PSI
2	48.0000 in	192.0000 in	100003048	STRUT C-CHANNEL 13/16 X 1-5/8 14GA SOLID GALV SHALLOW
3	24.0000 in	96.0000 in	100003048	STRUT C-CHANNEL 13/16 X 1-5/8 14GA SOLID GALV SHALLOW
4	1	4	100044113	ANCHOR RAPID LIFT TECH 5T CLUTCH 4.4375IN LONG MB RL-25 GALV
5	1	8	100044110	ANCHOR RAPID LIFT TECH 5T CLUTCH 3.4375IN LONG MB RL-25 GALV
6	1	4	100044139	GROUND INSERT BOTTLE ROCKET 1/2-13 BRONZE w/ 90DEG 0.375x16" STEEL ROD
7	1	1	300153817	REINFORCING MAT 300153817

200078828.idw

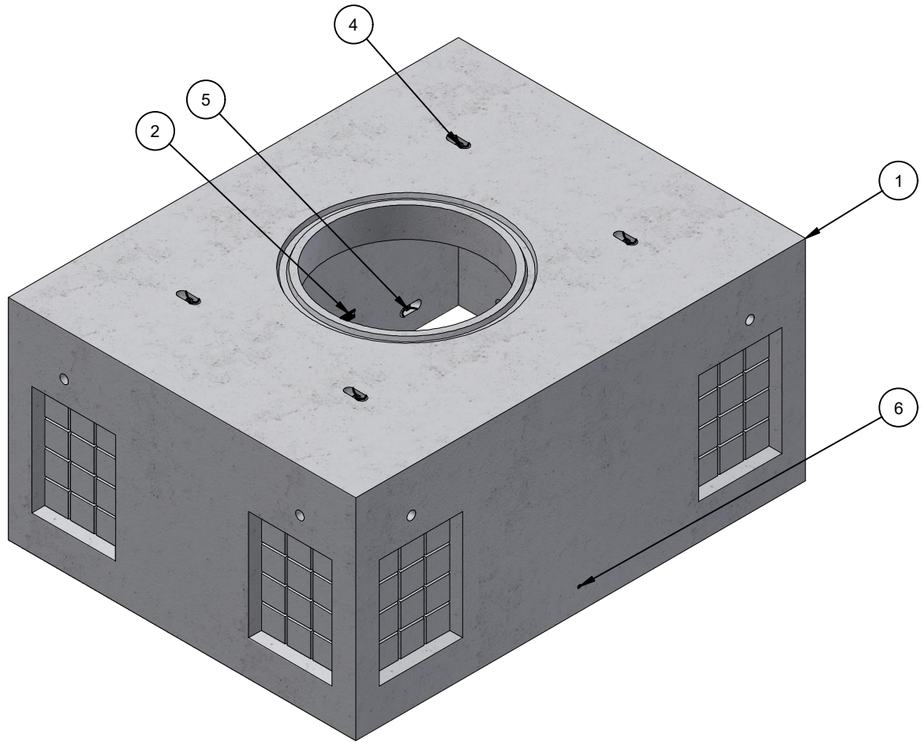

ISOMETRIC VIEW

LIFTING NOTES

- INSTALLATION: THIS CONCRETE PRODUCT IS DESIGNED TO BE LIFTED AT 5000 PSI WITH 4 LIFT CONNECTIONS EQUALLY LOADED TO 2 LIFTING POINTS AT A MINIMUM 60° SLING ANGLE, MEASURED FROM HORIZONTAL.
- DEMOLDING: THIS CONCRETE PRODUCT IS DESIGNED TO BE LIFTED AT 2500 PSI WITH 4 LIFT CONNECTIONS EQUALLY LOADED TO 4 LIFTING POINTS AT A MINIMUM 60° SLING ANGLE, MEASURED FROM HORIZONTAL.

*All rigging shall be design by a qualified professional. Loading diagrams show illustrations of possible rigging setups to achieve the required sling angle and load leg equalization. Other valid rigging configurations are possible. A qualified professional must be consulted prior to lifting.

RIGGING DIAGRAMS*

INSTALLATION **B**

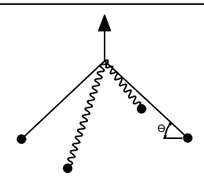

DEMOLDING **C**

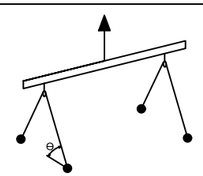

BURY DEPTH:	0.5' - 2.0' to Top
WATER LEVEL:	3.0'
APPROX. WEIGHT:	9749.6 Lbs
DESIGN SPEC:	ACI 318,ASTM C857
LOADING SPEC:	A-16 (AASHTO HS20-44)
REINFORCEMENT TYPE:	Rebar
LIFTING TYPE:	Tech Erection Anchor

JENSEN PRECAST EST. 1968

WWW.JENSENPRECAST.COM

©2024 Jensen Precast- All rights reserved.
All materials appearing as Jensen Precast documents and the like are proprietary work product and are protected under U.S. copyright and other laws.
Unless in conjunction with business conducted with Jensen Precast, any use of Jensen Precast work product without express, written consent is prohibited, and recipient is prohibited from distributing any and all work product to non-approved third parties under penalty of civil action.

CHANGE HISTORY

NO.	DESCRIPTION	DATE	BY
A	DRAWING CREATED	2/23/2023	E.Fine

DESCRIPTION:
Vault 7296x42 Rect. Top Section 36"C Knockout Tacoma Power 63356
CASTING LAYOUT

REV: A-7

PART NUMBER:	200078828	DRAWN BY:	E.Fine
CREATED:	8/8/2023	MODIFIED:	4/8/2024

SHEET: 1 OF 2

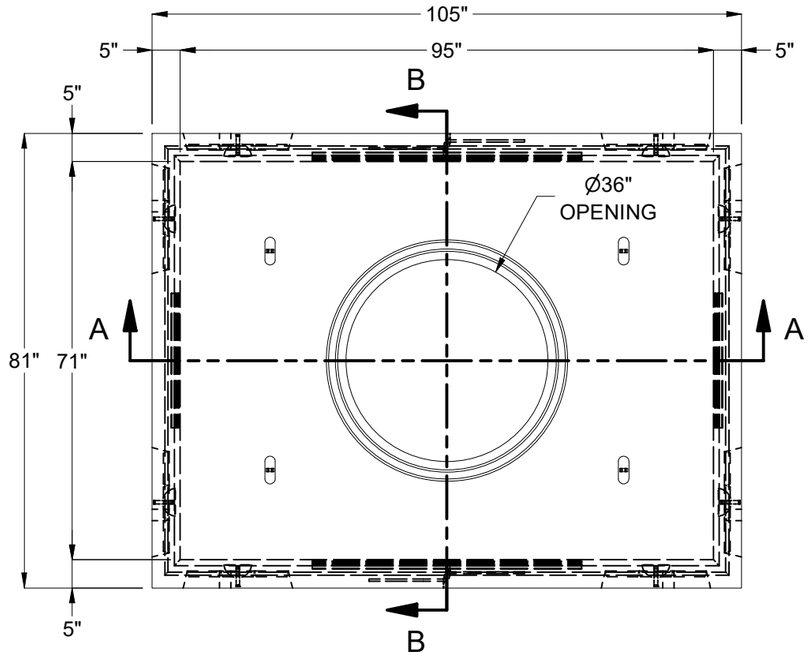

PLAN VIEW

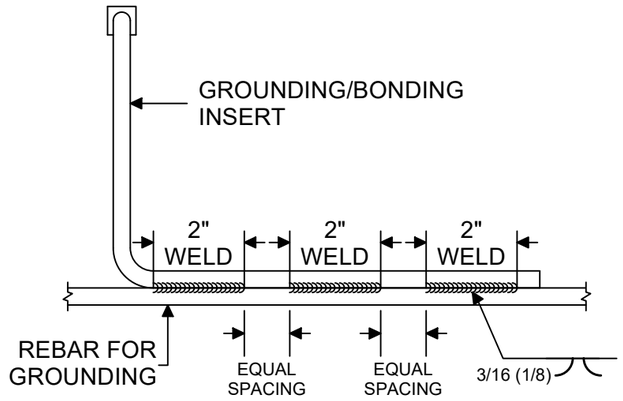

CONNECTION DETAIL

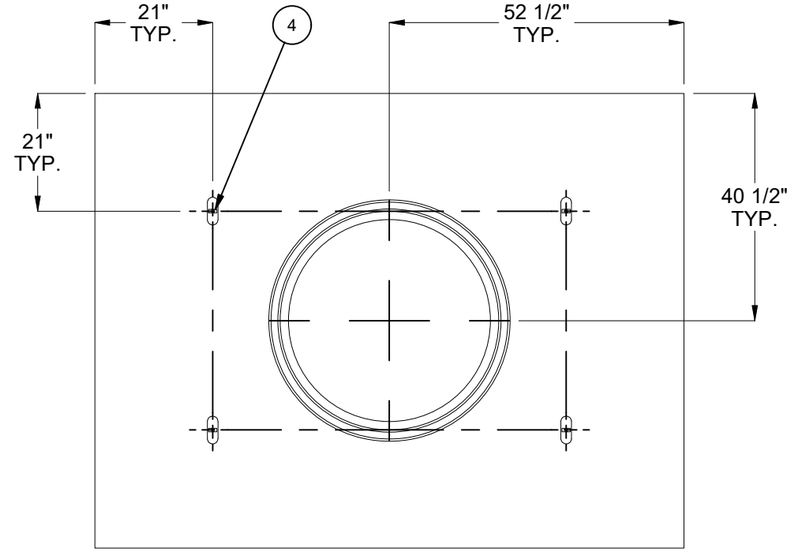

PLAN VIEW
(SHOWING OBJECT DIMENSIONS)

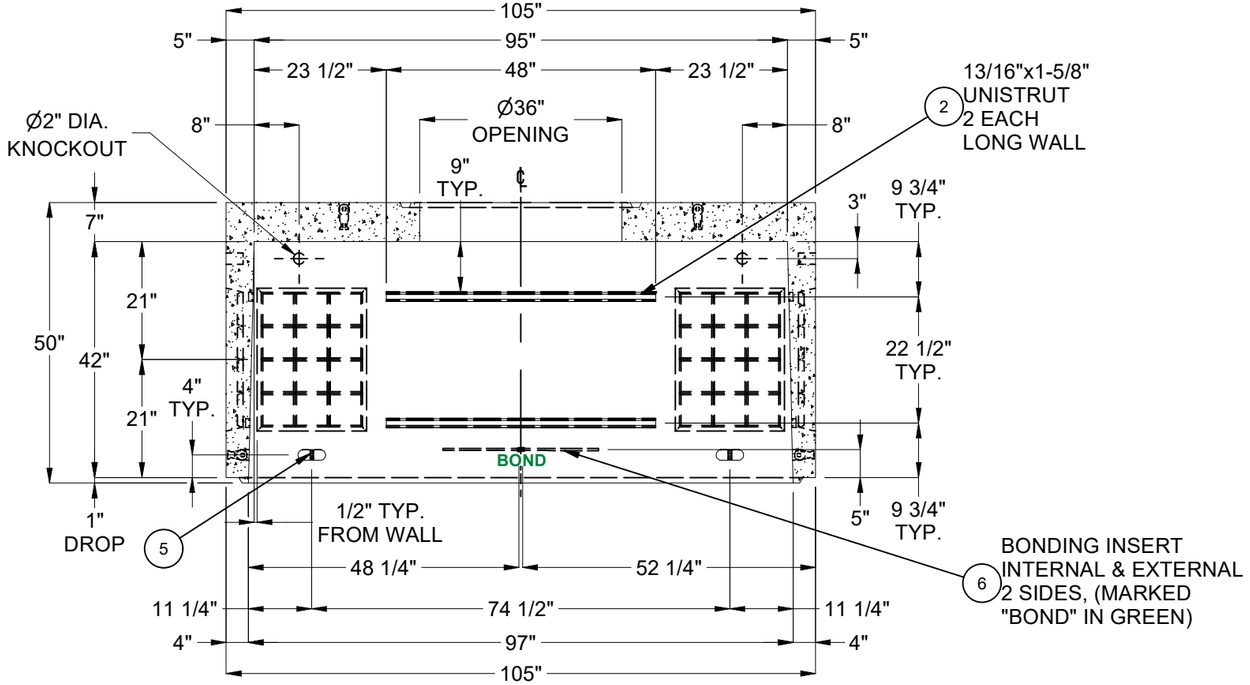

SECTION A-A

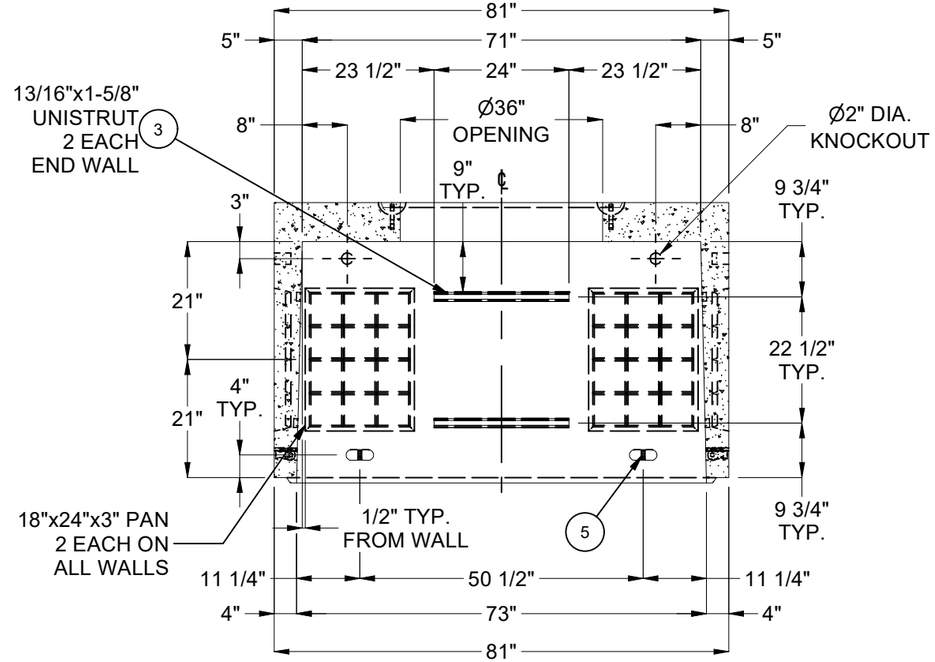

SECTION B-B

BURY DEPTH:	0.5' - 2.0' to Top		
WATER LEVEL:	3.0'	APPROX. WEIGHT:	9749.6 Lbs
DESIGN SPEC:	ACI 318,ASTM C857	LOADING SPEC:	A-16 (AASHTO HS20-44)
REINFORCEMENT TYPE:	Rebar	LIFTING TYPE:	Tech Erection Anchor

JENSEN PRECAST EST. 1968

WWW.JENSENPRECAST.COM

©2024 Jensen Precast- All rights reserved.
All materials appearing as Jensen Precast documents and the like are proprietary work product and are protected under U.S. copyright and other laws.
Unless in conjunction with business conducted with Jensen Precast, any use of Jensen Precast work product without express, written consent is prohibited, and recipient is prohibited from distributing any and all work product to non-approved third parties under penalty of civil action.

DESCRIPTION:	Vault 7296x42 Rect. Top Section 36"C Knockout Tacoma Power 63356		REV: A-7
	CASTING DRAWING		
PART NUMBER:	200078828	DRAWN BY:	E.Fine
CREATED:	8/8/2023	MODIFIED:	4/8/2024

SHEET: 2 OF 2

200078828.idw