BILL OF MATERIALS

ITEM	UNIT QTY	QTY	PART NUMBER	DESCRIPTION
1	0.242 ft^3	0.242 ft^3	100011426	CONCRETE MIX GENERIC 5500 PSI
2	1	1	100042868	Cap Handhole PP HNV08 BRKS

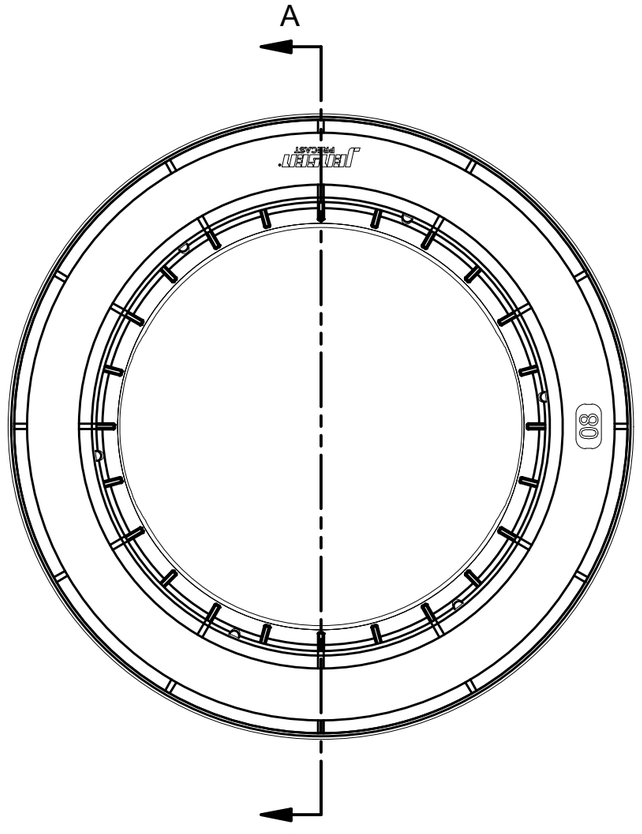

PLAN VIEW

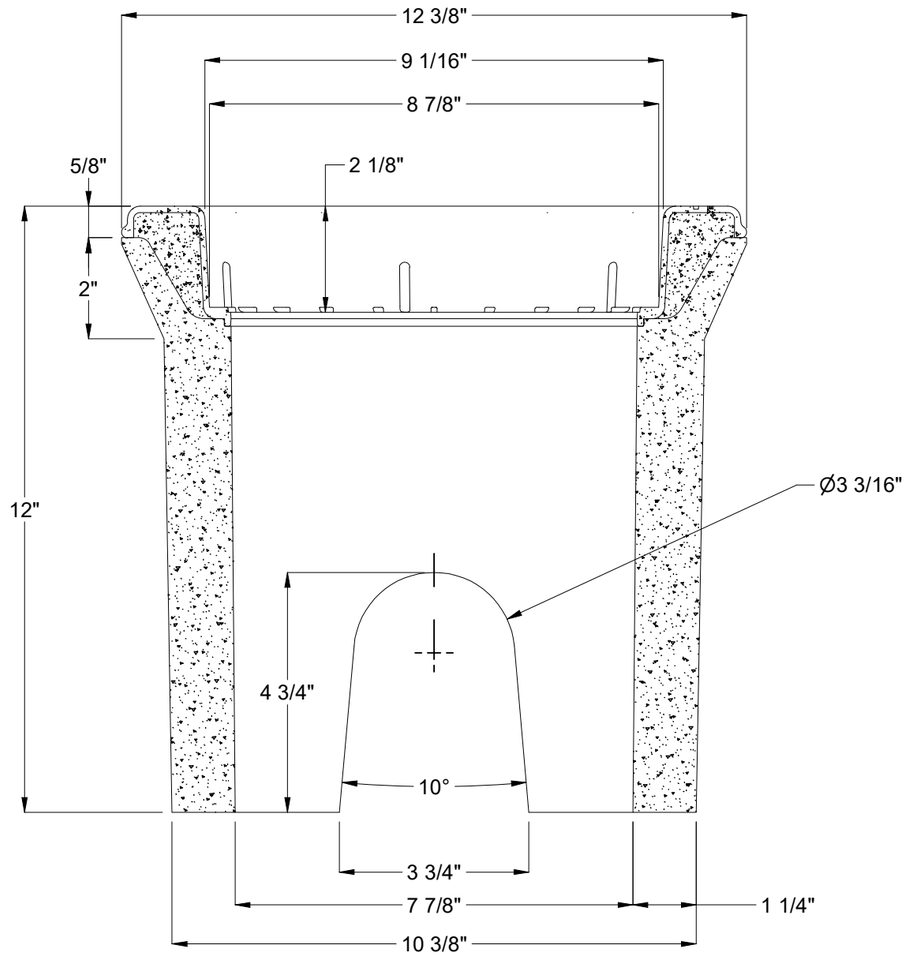

SECTION A-A

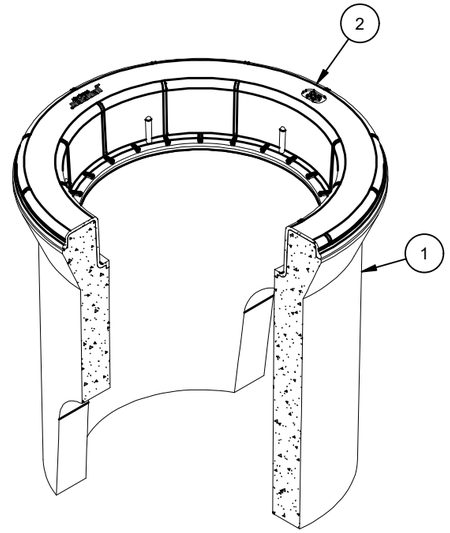

ISO BREAKOUT VIEW

CHANGE HISTORY			
NO.	DESCRIPTION	DATE	BY
A	INITIAL RELEASE	8/17/2023	MB

BURY DEPTH:	0.0' - 0.5' to Top		
WATER LEVEL:	Below Structure	APPROX. WEIGHT:	37.12 Lbs
DESIGN SPEC:	ASTM C857	LOADING SPEC:	A-03 (300 psf)
AGENCY:		AGENCY SPEC:	

JENSEN PRECAST EST. 1968

WWW.JENSENPRECAST.COM

©2024 Jensen Precast- All rights reserved.
All materials appearing as Jensen Precast documents and the like are proprietary work product and are protected under U.S. copyright and other laws.
Unless in conjunction with business conducted with Jensen Precast, any use of Jensen Precast work product without express, written consent is prohibited, and recipient is prohibited from distributing any and all work product to non-approved third parties under penalty of civil action.

DESCRIPTION:	HNV08x12 Cast-In Frame LAYOUT REVIEW		REV: A-1
PART NUMBER:	200078718	DRAWN BY:	M. Baumann
CREATED:	8/9/2022	MODIFIED:	6/6/2024
			SHEET: 1 OF 1

200078718.idw