BILL OF MATERIALS					
ITEM	ITEM QTY	QTY	PART NUMBER	DESCRIPTION	PART NAME
1	1	1	200052006	HH1730-LK21-R	200052006

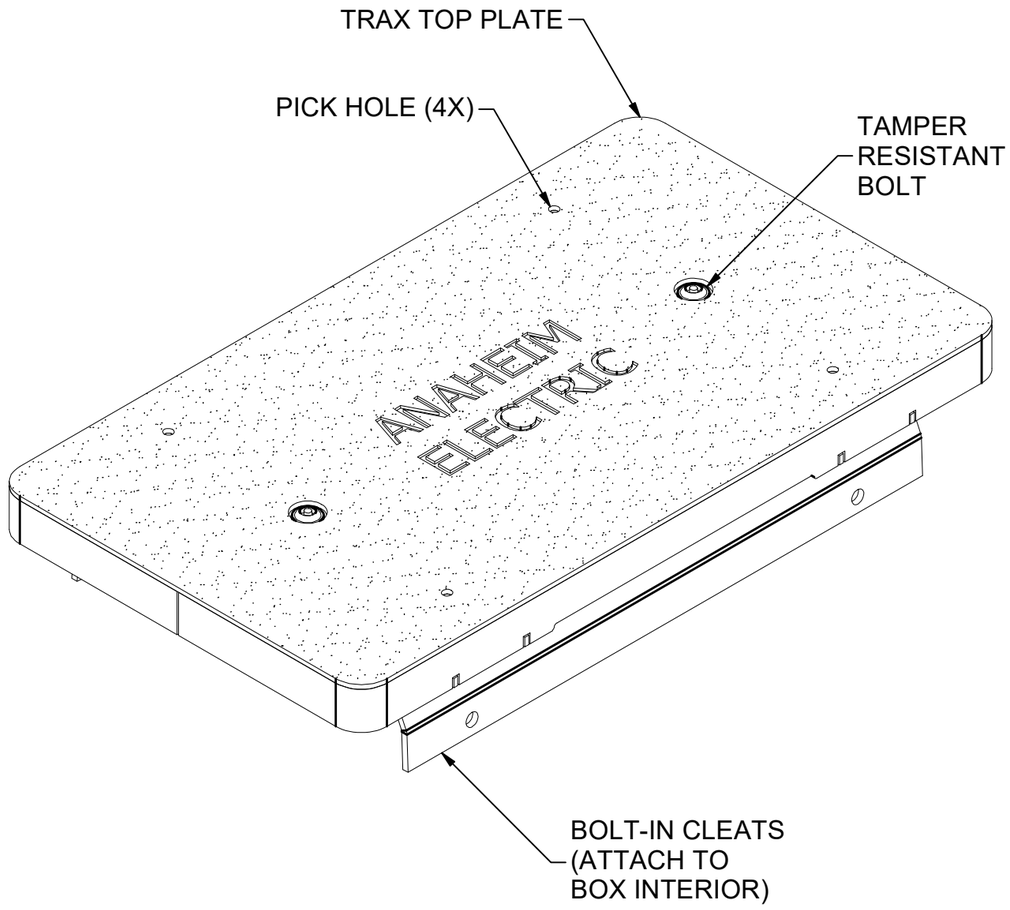

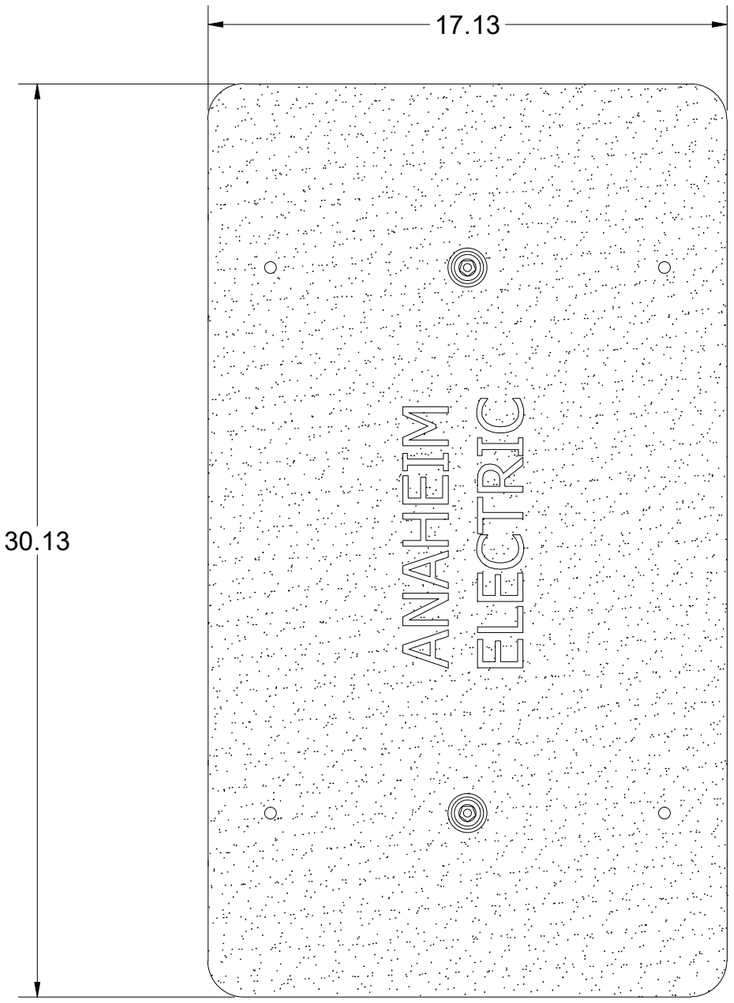

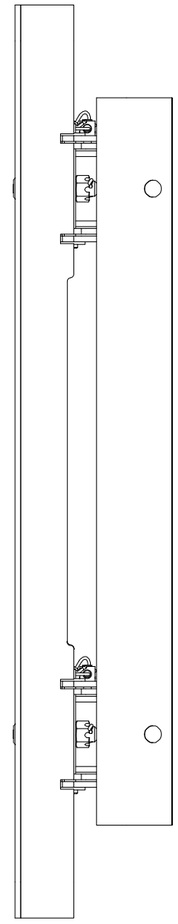

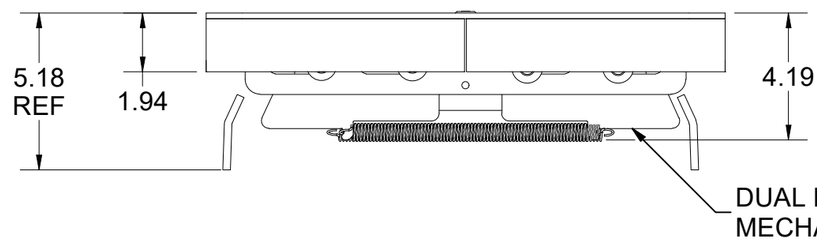

DESIGN IS FOR 200052006 WITH BEAD WELD ADDED

LOADING CRITERIA: ASTM C1802 Load Level 02

300 psf, or 600 lb load on 5.5" x 5.5" footprint restricted to areas of pedestrian use and light maintenance vehicles use, and other areas that are inaccessible to all other vehicle traffic.

SURFACE:	TraxPlate™	FINISH:	Galvanized
WEIGHT:	70.63 lbs	MARKING:	

JENSEN METALTECH
450 E. GLENDALE AVE. SPARKS. NV 89431
775-352-2716 FAX: 755-358-8127
JENSENMETALTECH.COM

©2023 Jensen Precast- All rights reserved. All materials appearing as Jensen Precast documents and the like are proprietary work product and are protected under U.S. copyright and other laws. Unless in conjunction with business conducted with Jensen Precast, any use of Jensen Precast work product without express, written consent is prohibited, and recipient is prohibited from distributing any and all work product to non-approved third parties under penalty of civil action.

DESCRIPTION:	HH1730-LK21-G-BW-ANAHEIM ELECTRIC-BD			REV:
	17x30 Locklid Door Assembly (Loading Criteria Per ASTM C1802 Load Level 02, Top Door, Steel, Drop In, Pickhole, TraxPlate™, Galvanized , ,)			A-3
PART NUMBER:	200078674	DRAWN BY:	D. Parlee	SHEET: 1
CREATED:	8/1/2023	MODIFIED:	11/1/2023	

200078674.idw

BILL OF MATERIALS

ITEM	ITEM QTY	QTY	PART NUMBER	DESCRIPTION	PART NAME
1	1	1	200052006	HH1730-LK21-R	200052006

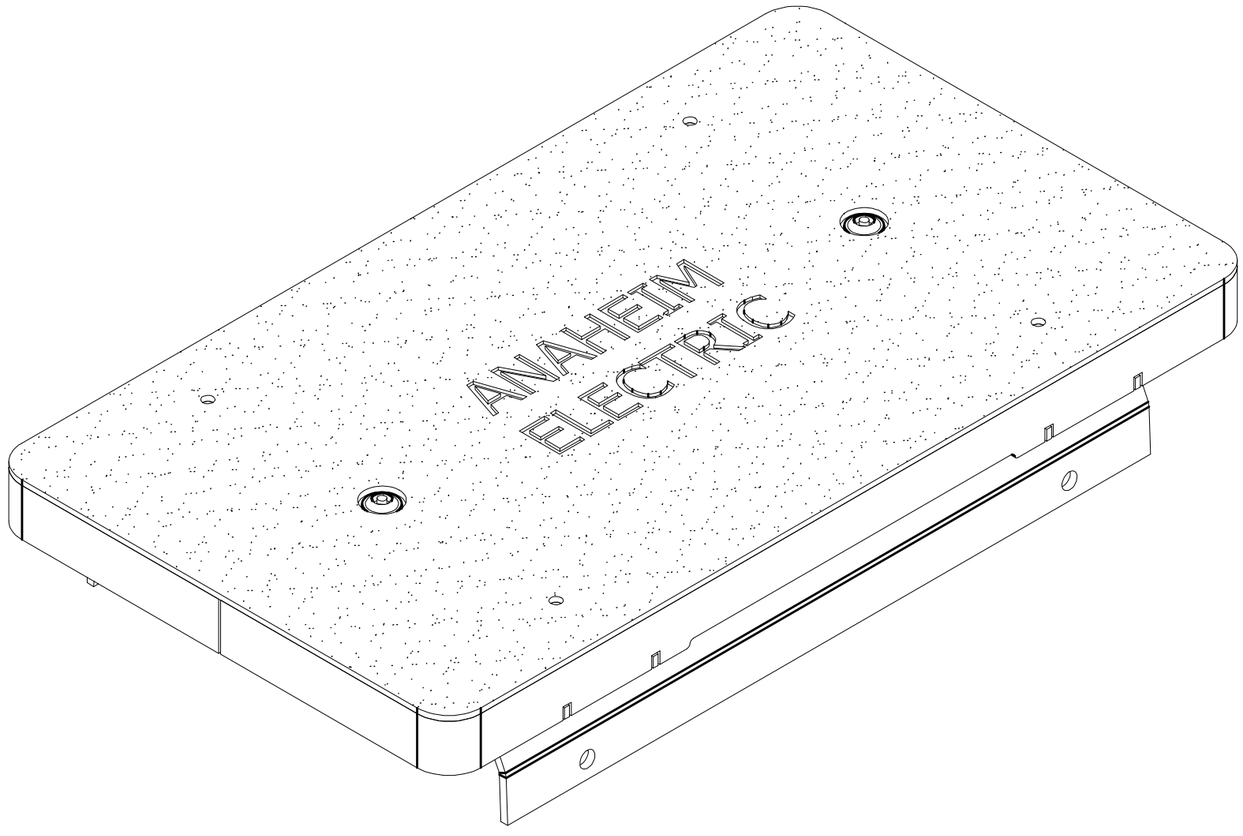

200078674.idw

REVISION HISTORY	
DESCRIPTION	DATE
ERM-51452 ENLARGE SLOT CAM SLOT. NEW NEST. PS STAYS THE SAME	11/23/2021
NEW BOM, NEW NEST, RESIZED ASSEMBLY FOR CLEARANCE, ERM 55848-1	10/30/2023

MATERIAL FINISH: Galvanized

MATERIAL SURFACE: TraxPlate™

JENSEN METALTECH
450 E. GLENDALE AVE. SPARKS. NV 89431
775-352-2716 FAX: 755-358-8127
JENSENMETALTECH.COM

©2023 Jensen Precast- All rights reserved.
All materials appearing as Jensen Precast documents and the like are proprietary work product and are protected under U.S. copyright and other laws.
Unless in conjunction with business conducted with Jensen Precast, any use of Jensen Precast work product without express, written consent is prohibited, and recipient is prohibited from distributing any and all work product to non-approved third parties under penalty of civil action.

PART NUMBER & DESCRIPTION: 200078674
HH1730-LK21-G-BW-ANAHEIM ELECTRIC-BD

REV: A-3

WEIGHT: 70.63 Lbs

DRAWN BY: D. Parlee

CREATED: 8/1/2023

MODIFIED: 11/1/2023

SHEET: 2