DESIGN NOTES:

- CONCRETE SHALL HAVE A 28 DAY MINIMUM COMPRESSIVE STRENGTH OF 7000 PSI
- SOIL UNIT WEIGHT DRY - 110 lbs/cu.ft.
- EQUIVALENT LATERAL PRESSURE DRY - 40 lbs/cu.ft.
- SOIL UNIT WEIGHT WET - 120 lbs/cu.ft.
- EQUIVALENT LATERAL PRESSURE WET - 80 lbs/cu.ft.

PRODUCTION NOTES:

- THIS PRODUCT SHALL ONLY BE PRODUCED IN A JENSEN INFRASTRUCTURE FACILITY
- LIFTING INSERTS SHALL BE INSTALLED PER MANUFACTURER'S REQUIREMENTS
- APPLIED FINISH - BROOMED
- INTERNAL LINER/COATING - NONE
- EXTERNAL LINER/COATING - NONE

BILL OF MATERIALS

ITEM	UNIT QTY	QTY	PART NUMBER	DESCRIPTION
1	23.956 ft^3	23.956 ft^3	100011429	CONCRETE MIX GENERIC 7000 PSI
2	1	4	100035848	Insert Ferrule Loop 0.75 x 3.5" 304SS (F42 or Equiv.)
3	1	1	200063368	CAS2-3366-CH4-DP-G-BD-SL-GR-PNW-OH07
4	1	1	100005933	GROUND INSERTS BOTTLE ROCKET BRASS 1/2X16 STEEL ROD 12G69
5	1	1	300153716	REINFORCING MAT 300153716

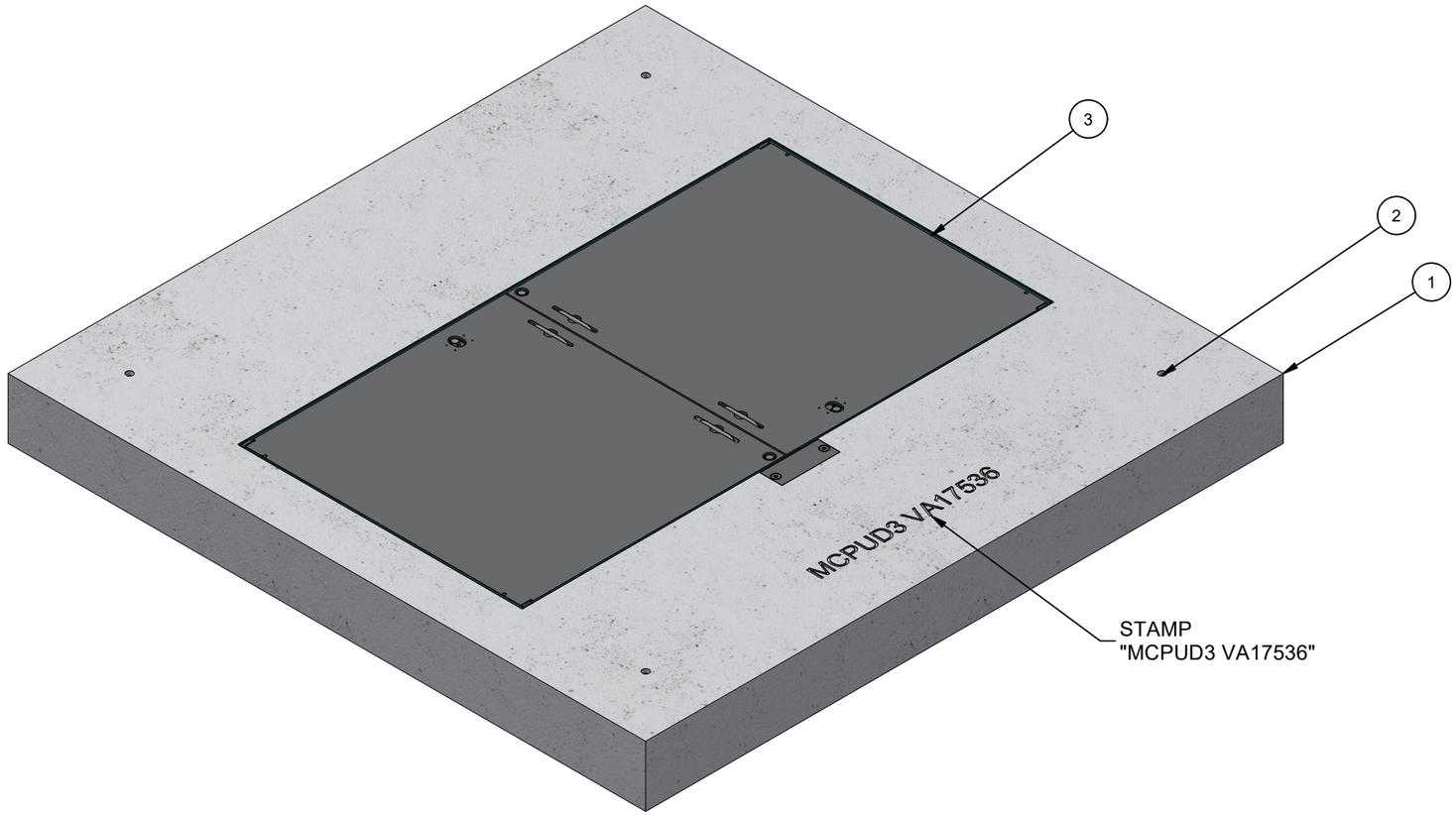

ISO LAYOUT

200078405.idw

LIFTING NOTES

■ THIS CONCRETE PRODUCT IS DESIGNED TO BE LIFTED AT 5000 PSI WITH 4 LIFT CONNECTIONS EQUALLY LOADED TO 2 LIFTING POINTS AT A MINIMUM 60° SLING ANGLE, MEASURED FROM HORIZONTAL.

*All rigging shall be design by a qualified professional. Loading diagrams show illustrations of possible rigging setups to achieve the required sling angle and load leg equalization. Other valid rigging configurations are possible. A qualified professional must be consulted prior to lifting.

RIGGING DIAGRAM* | B

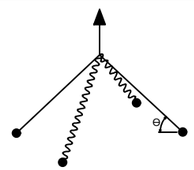

BURY DEPTH:	0.0' - 0.0' to Top		
WATER LEVEL:	Below Structure	APPROX. WEIGHT:	4015.38 Lbs
DESIGN SPEC:	ACI 318,ASTM C857	LOADING SPEC:	A-16 (AASHTO HS20-44)
REINFORCEMENT TYPE:	Rebar	LIFTING TYPE:	Insert

Infrastructure
JENSEN
WWW.JENSENPRECAST.COM

©2026 Jensen Infrastructure - All rights reserved.
All materials appearing as Jensen Infrastructure documents and the like are proprietary work product and are protected under U.S. copyright and other laws.
Unless in conjunction with business conducted with Jensen Infrastructure , any use of Jensen Infrastructure work product without express, written consent is prohibited, and recipient is prohibited from distributing any and all work product to non-approved third parties under penalty of civil action. This product shall only be produced in a Jensen Infrastructure facility.

CHANGE HISTORY

NO.	DESCRIPTION	DATE	BY
1	DRAWING CREATED	7/26/2023	E.Fine
2	GROUNDING BAR UPDATED	8/29/2023	E.Fine
3	TOP SLAB LIFTING UPDATED	9/25/2023	E.Fine
4	PROPERTIES UPDATED	10/13/2023	E.Fine
5	PROPERTIES UPDATED	9/29/2025	A.Viveiros
6	2307-55616	2-20-26	MLR

DESCRIPTION: Vault 7676x9 Slab Top 33"x66"C Cast-In Cover Mason PUD VA17536

CASTING LAYOUT

REV: E-1

PART NUMBER:	200078405	DRAWN BY:	S. de Lange Boom
CREATED:	7/26/2023	MODIFIED:	3/4/2026

SHEET: 1 OF 2

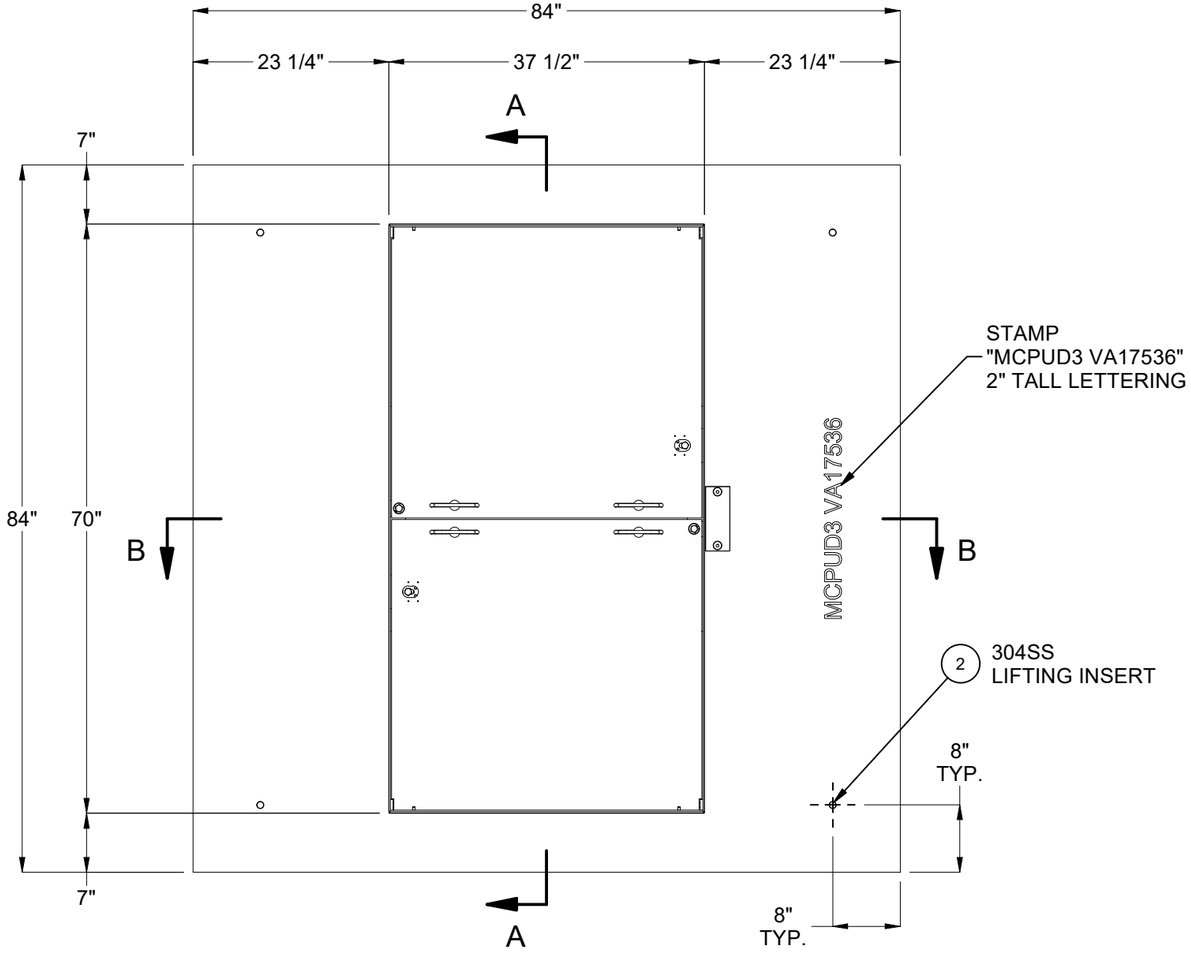

PLAN VIEW

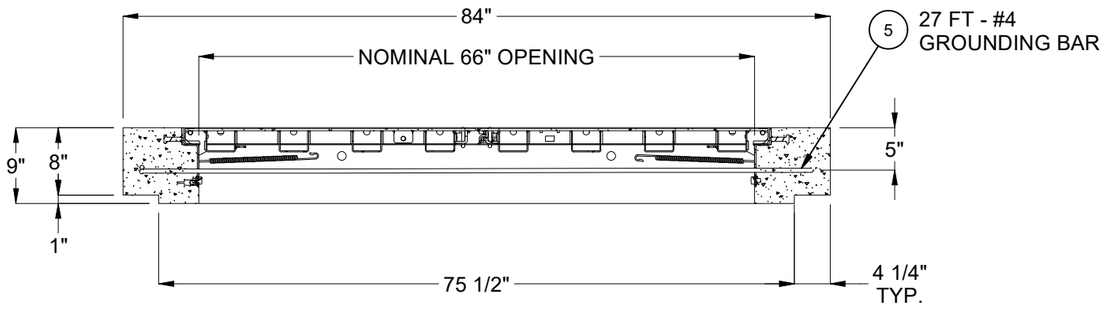

SECTION A-A

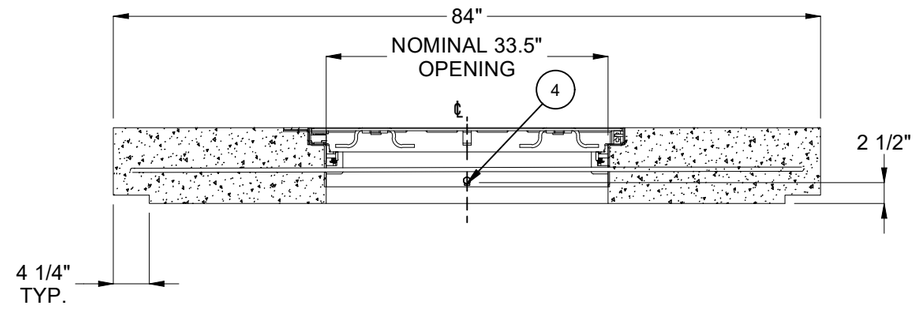

SECTION B-B

BURY DEPTH:	0.0' - 0.0' to Top		
WATER LEVEL:	Below Structure	APPROX. WEIGHT:	4015.38 Lbs
DESIGN SPEC:	ACI 318,ASTM C857	LOADING SPEC:	A-16 (AASHTO HS20-44)
REINFORCEMENT TYPE:	Rebar	LIFTING TYPE:	Insert

Infrastructure
JENSEN
WWW.JENSENPRECAST.COM

©2026 Jensen Infrastructure - All rights reserved.
All materials appearing as Jensen Infrastructure documents and the like are proprietary work product and are protected under U.S. copyright and other laws.
Unless in conjunction with business conducted with Jensen Infrastructure , any use of Jensen Infrastructure work product without express, written consent is prohibited, and recipient is prohibited from distributing any and all work product to non-approved third parties under penalty of civil action. This product shall only be produced in a Jensen Infrastructure facility.

DESCRIPTION:	Vault 7676x9 Slab Top 33"x66"C Cast-In Cover Mason PUD VA17536 CASTING DRAWING		REV: E-1
PART NUMBER:	200078405	DRAWN BY:	S. de Lange Boom
CREATED:	7/26/2023	MODIFIED:	3/4/2026
			SHEET: 2 OF 2

200078405.idw