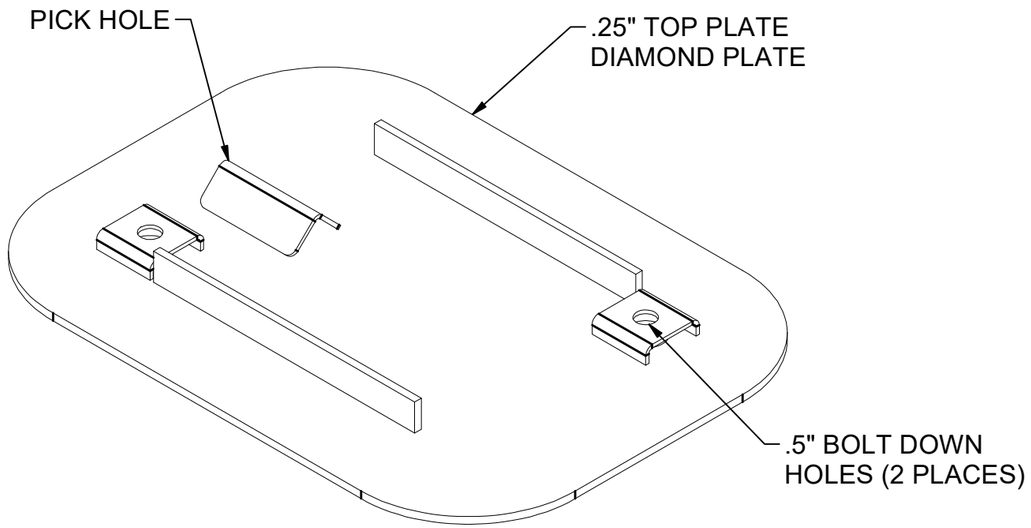

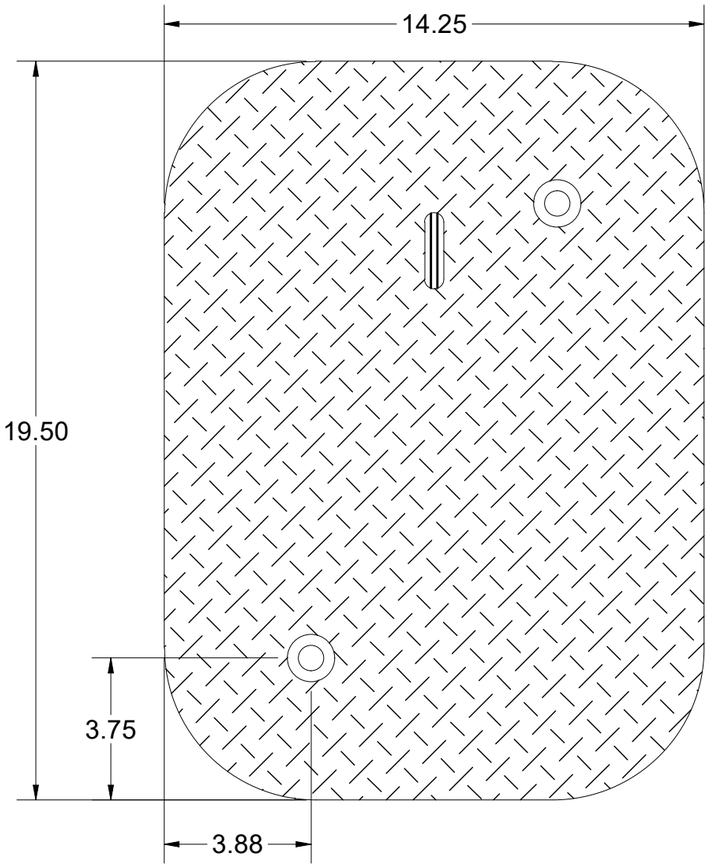

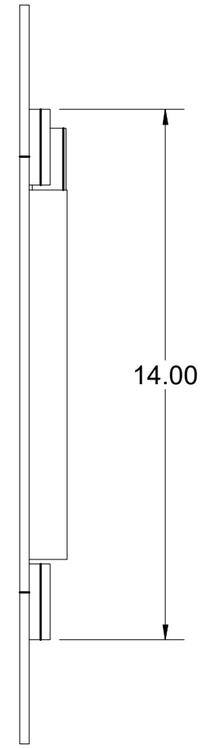

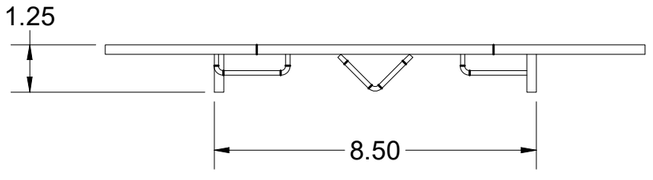

LOADING CRITERIA: ASTM C1802 Load Level 02

300 psf, or 600 lb load on 5.5" x 5.5" footprint restricted to areas of pedestrian use and light maintenance vehicles use, and other areas that are inaccessible to all other vehicle traffic.

SURFACE:	Diamond Plate	FINISH:	Galvanized
WEIGHT:	22.56 lbs	MARKING:	None

Infrastructure
JENSEN
527 Dunn Circle, Sparks, NV 89431
775-352-2716 FAX: 755-358-8127
JENSENMETALTECH.COM

©2025 Jensen Infrastructure - All rights reserved.
All materials appearing as Jensen Infrastructure documents and the like are proprietary work product and are protected under U.S. copyright and other laws. Unless in conjunction with business conducted with Jensen Infrastructure , any use of Jensen Infrastructure work product without express, written consent is prohibited, and recipient is prohibited from distributing any and all work product to non-approved third parties under penalty of civil action.
This product shall only be produced in a Jensen Infrastructure facility.

DESCRIPTION:	HN1017-SD2-C01-G-BD 10x17 Handhole Door Assembly (Loading Criteria Per ASTM C1802 Load Level 02, Single Door, Steel, Drop In, Pickhole, Diamond Plate, Galvanized)			REV:	A-2-1
PART NUMBER:	200077746	DRAWN BY:	M. Newman	SHEET:	1
CREATED:	7/25/2023	MODIFIED:	8/26/2025		

200077746.idw

BILL OF MATERIALS

ITEM	UNIT QTY	QTY	PART NUMBER	DESCRIPTION	PART NAME
1	1	1	200018206	PICK HOLE ANGLE	200018206
2	1	2	200015371	J CONE BASE	200015371
3	20.390 lbmass	20.390 lbmass	100007736	Door Component Steel Plate, Top	200035146
4	0.762 lbmass	1.525 lbmass	100007736	Door Component Steel Stiffener, Bar	200063440

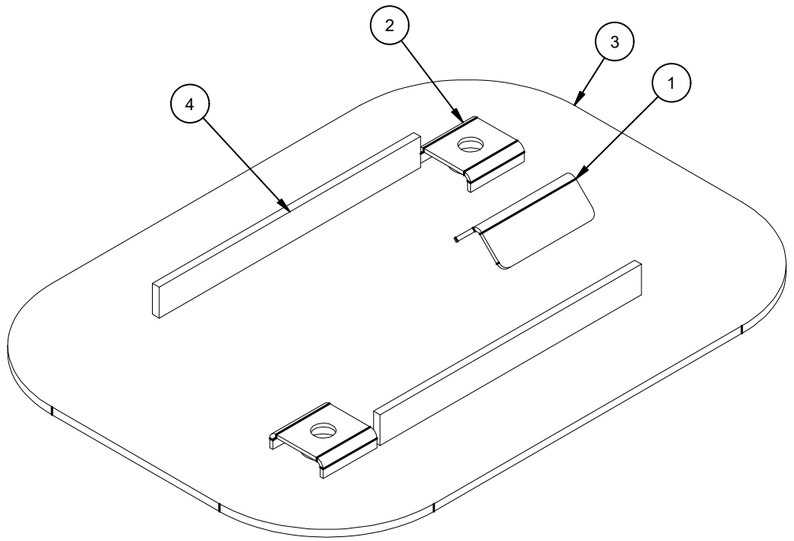

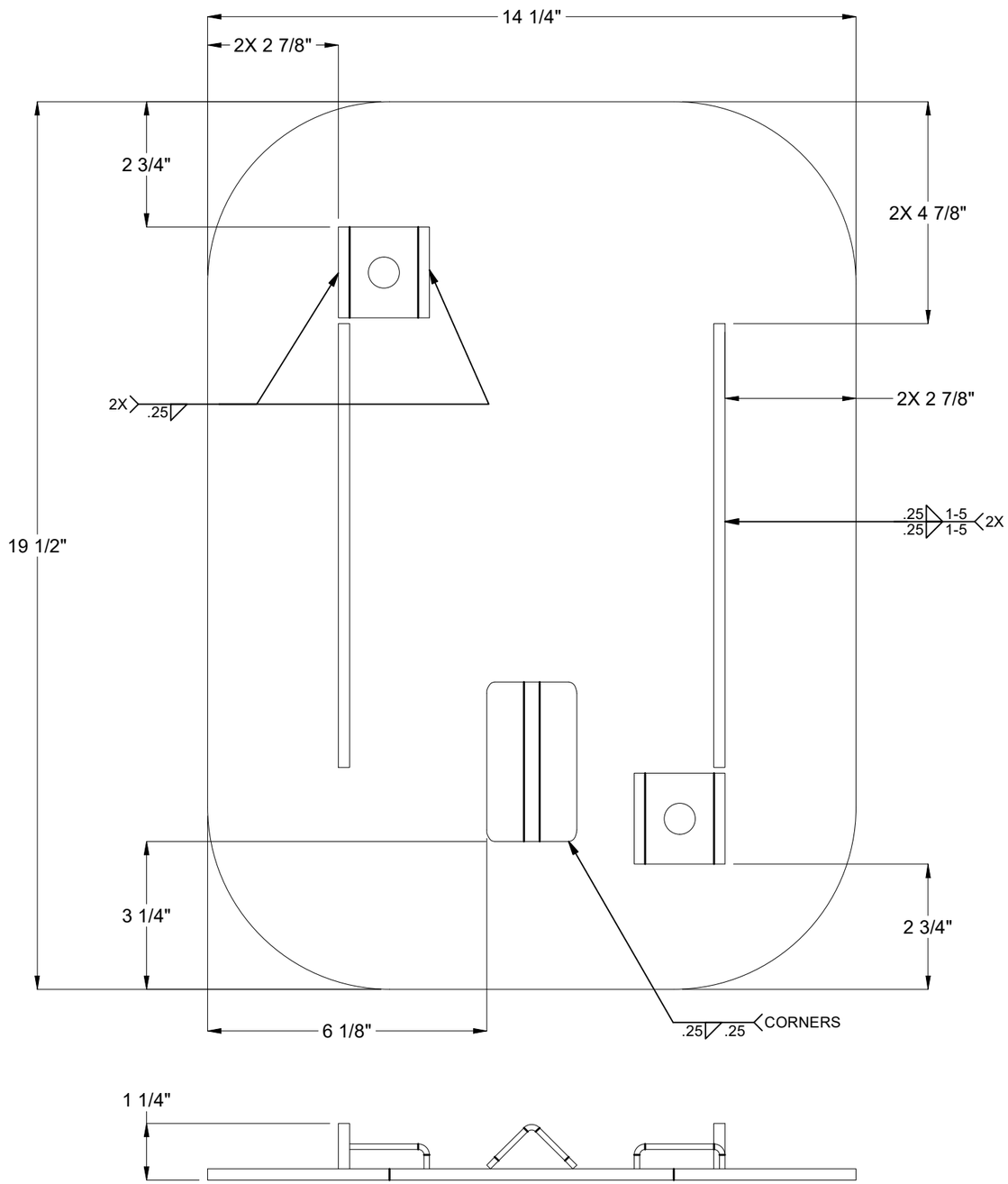

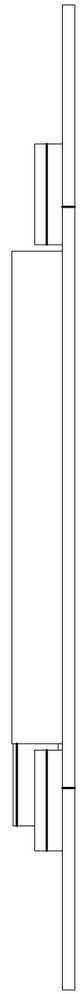

200077746.idw

REVISION HISTORY		
DESCRIPTION	DATE	Revised By
NO CHANGE. CLEANED UP PRINT / UPDATED DESCRIPTION	8/26/2025	M. Newman

MATERIAL FINISH: Galvanized

MATERIAL SURFACE: Diamond Plate

Infrastructure JENSEN

527 Dunn Circle, Sparks, NV 89431
775-352-2716 FAX: 755-358-8127
JENSENMETALTECH.COM

©2025 Jensen Infrastructure - All rights reserved.
All materials appearing as Jensen Infrastructure documents and the like are proprietary work product and are protected under U.S. copyright and other laws. Unless in conjunction with business conducted with Jensen Infrastructure , any use of Jensen Infrastructure work product without express, written consent is prohibited, and recipient is prohibited from distributing any and all work product to non-approved third parties under penalty of civil action.
This product shall only be produced in a Jensen Infrastructure facility.

PART NUMBER & DESCRIPTION: 200077746 HN1017-SD2-C01-G-BD

REV: A-2-1

WEIGHT: 22.56 Lbs

DRAWN BY: M. Newman

SHEET: 2

CREATED: 7/25/2023

MODIFIED: 8/26/2025

BURN LIST - BOM

PART NAME	ITEM QTY	QTY	DESCRIPTION	STOCK NUMBER	MATERIAL	MASS	SHEET
200035146	1	20.390 lbmass	Door Component Steel Plate, Top	100007736	SHT STL CQ DP RAW .25 - 36 KSI YIELD	20.390 lbmass	04
200063440	2	1.525 lbmass	Door Component Steel Stiffener, Bar	100007736	SHT STL CQ DP RAW .25 - 36 KSI YIELD	0.762 lbmass	05

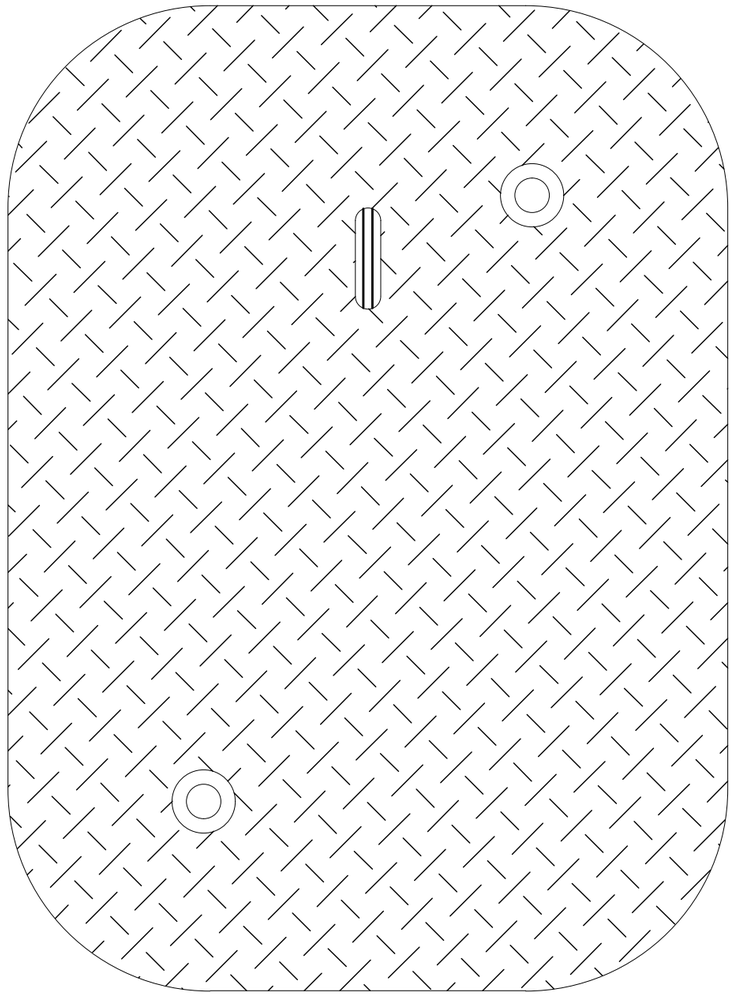

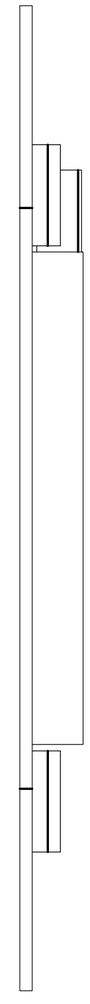

200077746.idw

MATERIAL FINISH:
Galvanized

MATERIAL SURFACE:
Diamond Plate

Infrastructure
JENSEN
527 Dunn Circle, Sparks, NV 89431
775-352-2716 FAX: 755-358-8127
JENSENMETALTECH.COM

©2025 Jensen Infrastructure - All rights reserved.
All materials appearing as Jensen Infrastructure documents and the like are proprietary work product and are protected under U.S. copyright and other laws. Unless in conjunction with business conducted with Jensen Infrastructure , any use of Jensen Infrastructure work product without express, written consent is prohibited, and recipient is prohibited from distributing any and all work product to non-approved third parties under penalty of civil action.
This product shall only be produced in a Jensen Infrastructure facility.

PART NUMBER & DESCRIPTION: 200077746
HN1017-SD2-C01-G-BD

REV: A-2-1

WEIGHT: 22.56 Lbs

DRAWN BY: M. Newman

CREATED: 7/25/2023

MODIFIED: 8/26/2025

SHEET: 3

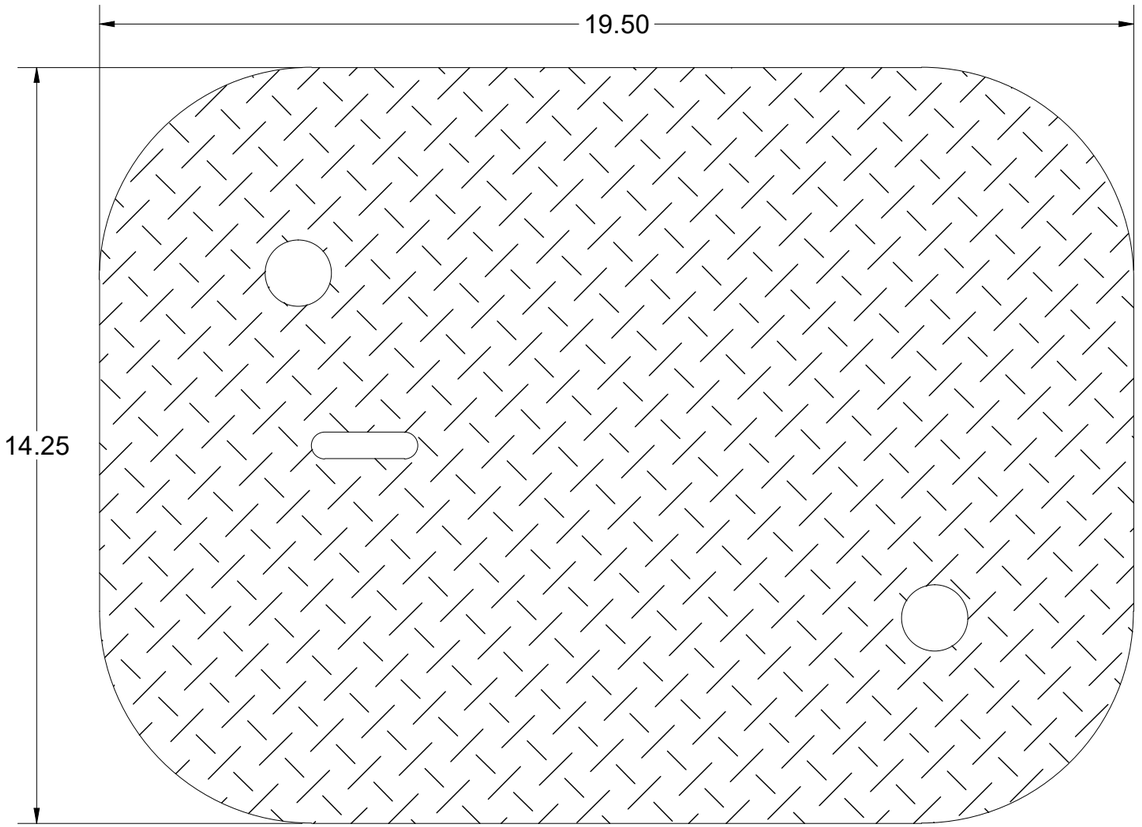

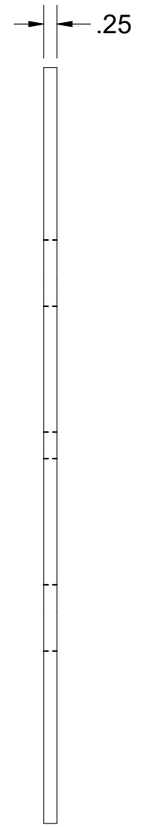

200077746.idw

BEND TABLE			
BEND RADIUS	V-OPENING	BEND ANGLE	BEND DEDUCTION
-	-	- 0	-

MATERIAL IFS: 100007736

MATERIAL THK: 0.25

MAT DESCRIPTION: SHT STL CQ DP RAW .25 - 36 KSI YIELD

Infrastructure
JENSEN
527 Dunn Circle, Sparks, NV 89431
775-352-2716 FAX: 755-358-8127
JENSENMETALTECH.COM

©2025 Jensen Infrastructure - All rights reserved.
All materials appearing as Jensen Infrastructure documents and the like are proprietary work product and are protected under U.S. copyright and other laws. Unless in conjunction with business conducted with Jensen Infrastructure , any use of Jensen Infrastructure work product without express, written consent is prohibited, and recipient is prohibited from distributing any and all work product to non-approved third parties under penalty of civil action.
This product shall only be produced in a Jensen Infrastructure facility.

NAME & DESCRIPTION: 200035146
Door Component Steel Plate, Top

REV: A-2-1

WEIGHT: 20.390 lbmass

DRAWN BY: M. Newman

CREATED: 7/25/2023

MODIFIED: 8/26/2025

SHEET: 4 OF 5

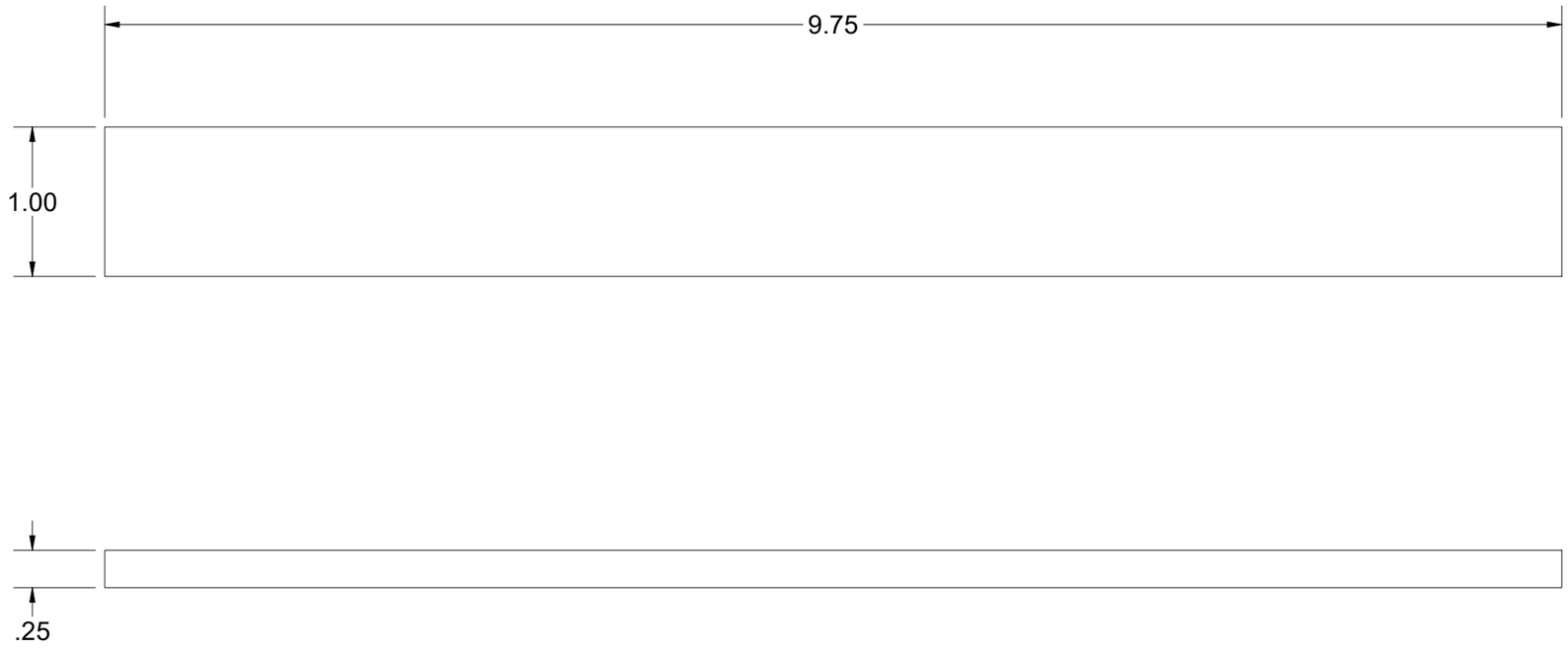

BEND TABLE			
BEND RADIUS	V-OPENING	BEND ANGLE	BEND DEDUCTION
-	-	- 0	-

MATERIAL IFS: 100007736

MATERIAL THK: 0.25

MAT DESCRIPTION: SHT STL CQ DP RAW .25 - 36 KSI YIELD

Infrastructure
JENSEN
527 Dunn Circle, Sparks, NV 89431
775-352-2716 FAX: 755-358-8127
JENSENMETALTECH.COM

©2025 Jensen Infrastructure - All rights reserved.
All materials appearing as Jensen Infrastructure documents and the like are proprietary work product and are protected under U.S. copyright and other laws. Unless in conjunction with business conducted with Jensen Infrastructure , any use of Jensen Infrastructure work product without express, written consent is prohibited, and recipient is prohibited from distributing any and all work product to non-approved third parties under penalty of civil action.
This product shall only be produced in a Jensen Infrastructure facility.

NAME & DESCRIPTION: 200063440
Door Component Steel Stiffener, Bar

REV: A-2-1

WEIGHT: 0.762 lbmass

DRAWN BY: M. Newman

SHEET: 5 OF 5

CREATED: 7/25/2023

MODIFIED: 8/26/2025

200077746.idw