NOTES:

- STANDARDS. AASHTO LRFD BRIDGE DESIGN SPECIFICATIONS, 8TH EDITION, WITH 2022 CALTRANS AMENDMENTS, CITY OF LOS ANGELES BUREAU OF ENGINEERING STANDARD PLAN S-601, LATEST, MANUAL PART H, LADWP P 178, ASTM C-857. STRUCTURAL CALCS FOR BOX: #34228 OR #33541.
- EACH CONCRETE SECTION SHALL BE MARKED ON THE INSIDE & OUTSIDE WITH "JENSEN", THE DESIGNATION "DWP/FA-CN", AND THE DATE OF THE POUR.
- EACH CONCRETE SECTION SHALL HAVE CAST-IN ON THE INSIDE "JENSEN", THE YEAR, AND THE DESIGNATION "FA-CN".

BILL OF MATERIALS

ITEM	UNIT QTY	QTY	PART NUMBER	DESCRIPTION
1	6.464 ft^3	6.464 ft^3	100005993	CONCRETE 5500 PSI DRYCAST MIX
2	1	3	100002867	ANCHOR DOGBONE P52 2T X 3-3/8" GALV
3	1	2	100002766	Insert Ferrule Loop 0.625 x 3.5" Zinc (F42 or Equiv.)
4	1	2	100002765	Insert Ferrule Loop 0.5 x 2.75" Zinc (F42 or Equiv.)
5	1	2	100017941	REINFORCING MAT 100017941

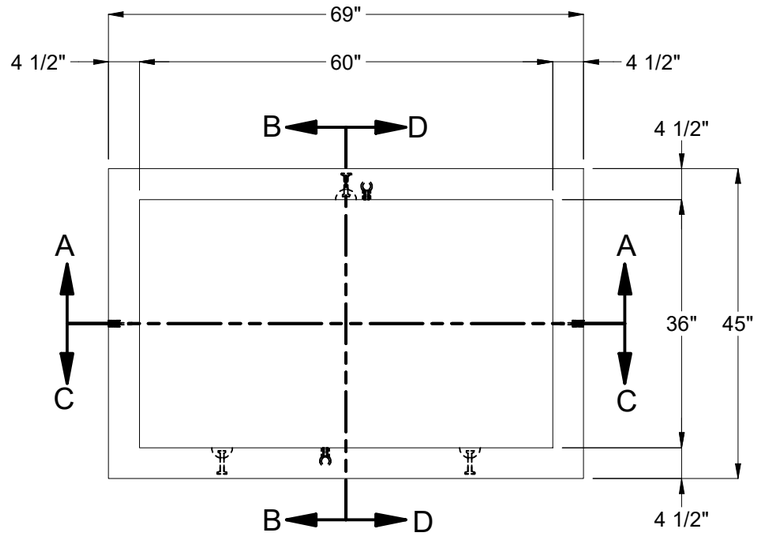

PLAN VIEW

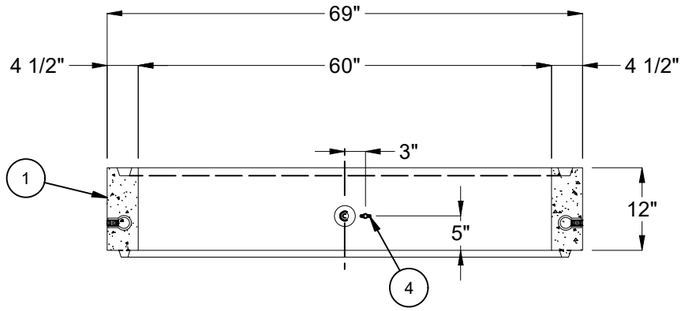

SECTION A-A

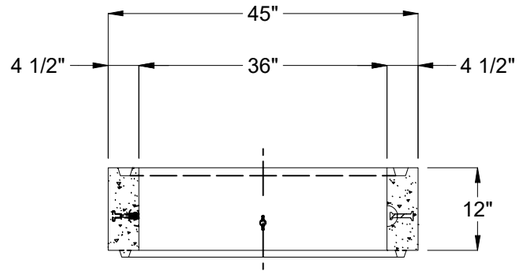

SECTION B-B

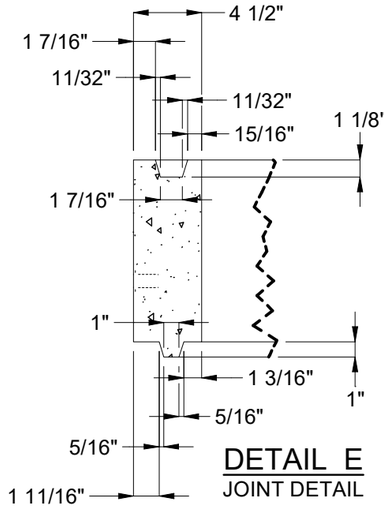

DETAIL E
JOINT DETAIL

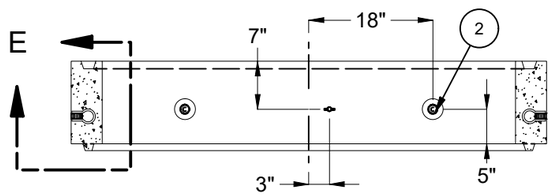

SECTION C-C

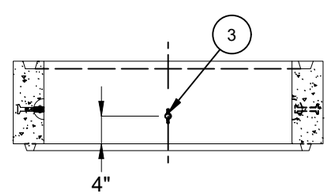

SECTION D-D

LIFTING NOTES

- INSTALLATION: THIS CONCRETE PRODUCT IS DESIGNED TO BE LIFTED AT 5500 PSI WITH 3 LIFT CONNECTIONS EQUALLY LOADED TO 3 LIFTING POINTS AT A MINIMUM 60° SLING ANGLE, MEASURED FROM HORIZONTAL.
- DEMOLDING: THIS CONCRETE PRODUCT IS DESIGNED TO BE LIFTED AT 2500 PSI WITH 2 LIFT CONNECTIONS EQUALLY LOADED TO 2 LIFTING POINTS AT A MINIMUM 90° SLING ANGLE, MEASURED FROM HORIZONTAL.

*All rigging shall be design by a qualified professional. Loading diagrams show illustrations of possible rigging setups to achieve the required sling angle and load leg equalization. Other valid rigging configurations are possible. A qualified professional must be consulted prior to lifting.

RIGGING DIAGRAMS*

INSTALLATION	A	DEMOLDING	G

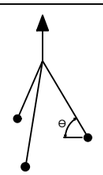

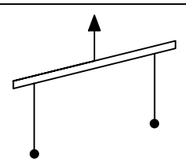

BURY DEPTH:	0.7' - 2.7' to Top		
WATER LEVEL:	3.0'	APPROX. WEIGHT:	973.3 Lbs
DESIGN SPEC:	AASHTO LRFD,ACI 318	LOADING SPEC:	AASHTO HL-93
REINFORCEMENT TYPE:	Rebar	LIFTING TYPE:	Dogbone

Infrastructure
JENSEN
WWW.JENSENINFRASTRUCTURE.COM

©2026 Jensen Infrastructure - All rights reserved.
All materials appearing as Jensen Infrastructure documents and the like are proprietary work product and are protected under U.S. copyright and other laws.
Unless in conjunction with business conducted with Jensen Infrastructure , any use of Jensen Infrastructure work product without express, written consent is prohibited, and recipient is prohibited from distributing any and all work product to non-approved third parties under penalty of civil action.
This product shall only be produced in a Jensen Infrastructure facility.

STOCKPILE - JENSEN INFRASTRUCTURE
CITY OF LOS ANGELES INSPECTION REQUIRED WO# C0034604

REVISION HISTORY

REV	DESCRIPTION	DATE	APPROVED
B-2	UPDATED TITLE BLOCK AND NOTES	10/8/2026	

DESCRIPTION:	Riser 3660x12 LADWP COLA CASTING LAYOUT		REV: B-2
PART NUMBER:	200077010	DRAWN BY: J. Prado	SHEET: 1 OF 1
CREATED:	8/29/2023	MODIFIED: 10/8/2026	

200077010.idw