NOTES
■ IN COMPLIANCE WITH UNIFORM PLUMBING CODE (UPC), INTERNATIONAL PLUMBING CODE (IPC), AND STRUCTURAL LOADING REQUIREMENTS OF ASTM INTERNATIONAL C1227.
■ MINIMUM ONE (1) ACCESS OPENING PER COMPARTMENT REQUIRED (AS SHOWN). ADDITIONAL ACCESS CAN BE ADDED IN LIEU OF PLUG COVER WHEN REQUIRED BY THE AUTHORITY HAVING JURISDICITON.
■ MUST BE INSTALLED PER "JENSEN PRECAST UNDERGROUND WASTEWATER PRECAST CONCRETE TANK INSTALLATION PROCEDURE" WHICH CAN BE FOUND AT https://www.jensenprecast.com/Tank-Installation-Procedure-d2106.pdf. THIS PROCEDURE ADDRESSES REQUIRED EXCAVATION, SITE PREPARATION, INSTALLATION, VENTILATION, AND WATER/VACCUM TESTING
■ NOMINAL TANK GALLON CAPACITY IS 5000 GALLONS. ACTUAL OPERATING GALLON CAPACITY IS APPROXIMATELY 4980 GALLONS WITH A SINGLE 3" BAFFLE WALL INSTALLED.

BILL OF MATERIALS

ITEM	QTY	PART NUMBER	DESCRIPTION
1	1	200064676	Tank JOP 4000-5000 Gallon x 8 Slab Top 24"E, 24"B, 24"E
2	1	200076481	Tank JOP 5000 Gallon 4 Inch Assembly Septic Single Baffle
3	4.000 ul	100013648	SEALANT JOINT BUTYL RUBBER ASTM C-990 AND M198 CS-102 1IN EQUIV X14.5FT PER ROLL
4	JOB SPECIFIC	100005850	CI RINGCOVER 24DIA B-5105-02/B-5105-R2 ASTM A48 CL35B CP O-RING GASKET OSI JENSEN/INTERCEPT
5	JOB SPECIFIC	100001524	Grade Ring D2432x3
6	JOB SPECIFIC	100001525	Grade Ring D2432x6
7	JOB SPECIFIC	100001526	Grade Ring D2432x12
8	JOB SPECIFIC	100012046	Plug Cover D2428x6 Slab Top

200076489.idw

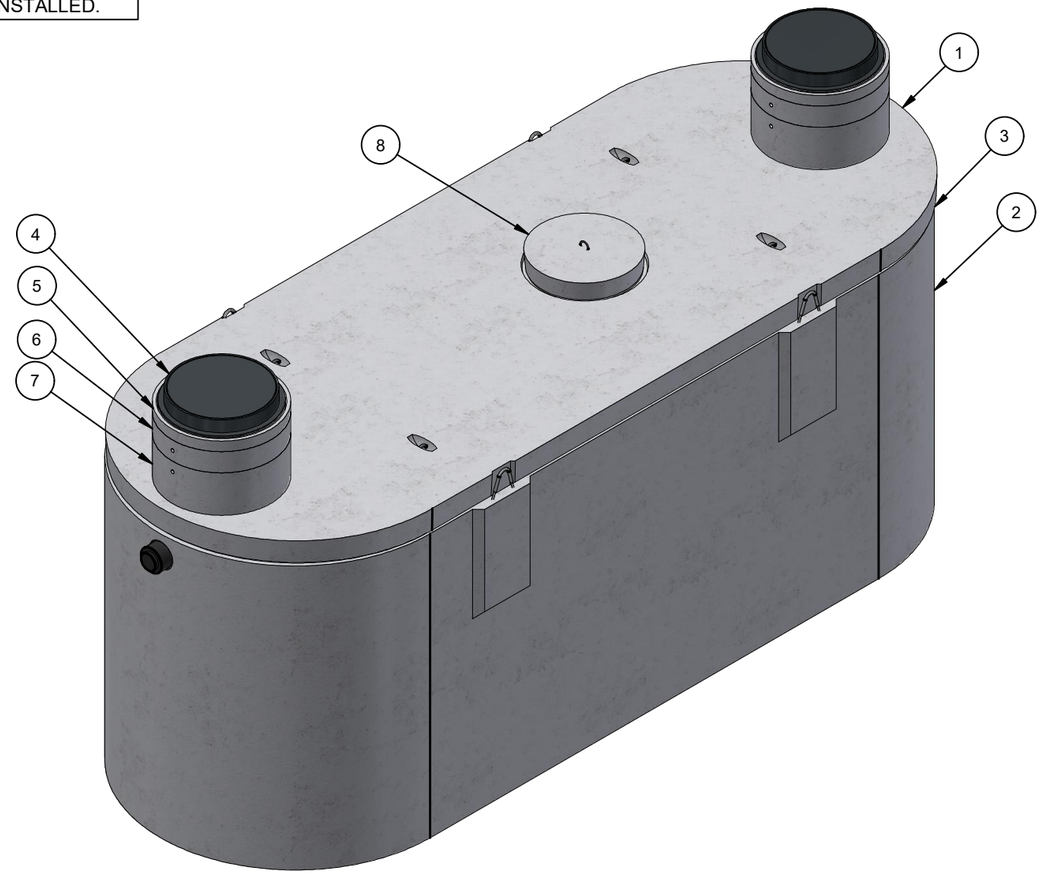

ISOMETRIC VIEW

CHANGE HISTORY			
REV	DESCRIPTION	DATE	BY
A	DRAWING CREATED	6/13/2023	DCH
B	ADDED CS-102 SEALANT	1/08/2024	MGL
B-1	RELOCATED BAFFLE	9/5/2024	SER

BURY DEPTH:	1.1' - 5.0' to Top		
WATER LEVEL:	Below Structure	APPROX. WEIGHT:	41558.38 Lbs
DESIGN SPEC:	ACI 318,ASTM C890	LOADING SPEC:	A-16 (AASHTO HS20-44)
AGENCY:		AGENCY SPEC:	

JENSEN PRECAST EST. 1968

WWW.JENSENPRECAST.COM

©2024 Jensen Precast- All rights reserved.
All materials appearing as Jensen Precast documents and the like are proprietary work product and are protected under U.S. copyright and other laws.
Unless in conjunction with business conducted with Jensen Precast, any use of Jensen Precast work product without express, written consent is prohibited, and recipient is prohibited from distributing any and all work product to non-approved third parties under penalty of civil action.

DESCRIPTION: Tank JOP 5000 Gallon 4 Inch Layout Septic 24"E, 24"B, 24"E Single Baffle

CASTING LAYOUT

PART NUMBER:	200076489	DRAWN BY:	D. HUGHES
CREATED:	6/7/2023	MODIFIED:	9/5/2024

REV: B-1

SHEET: 1 OF 2

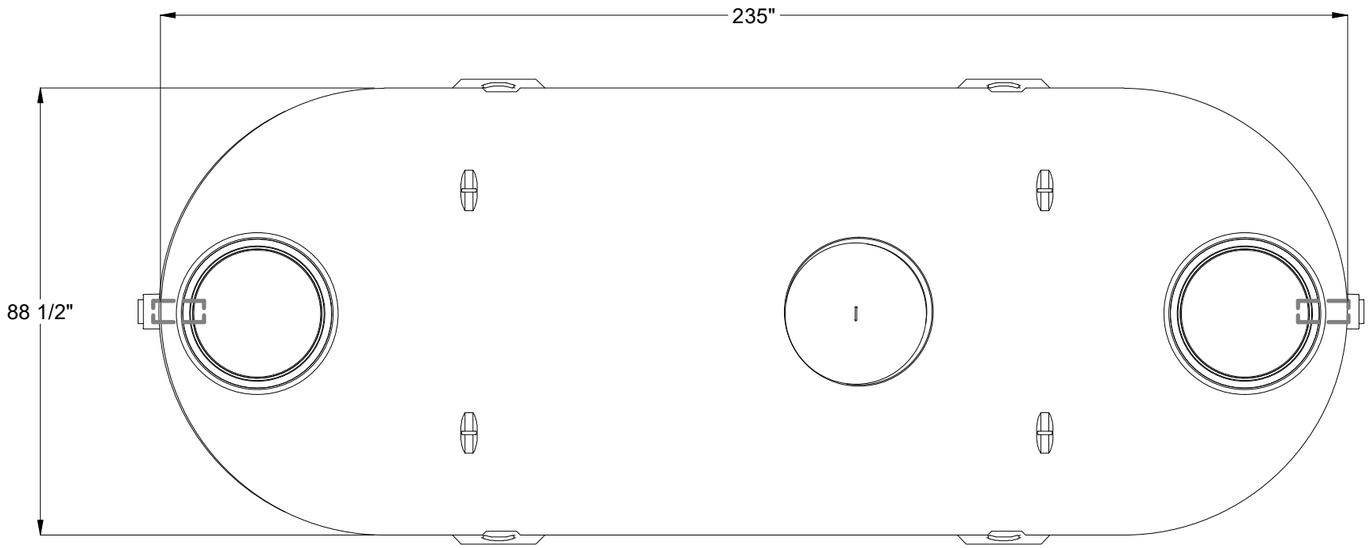

PLAN VIEW

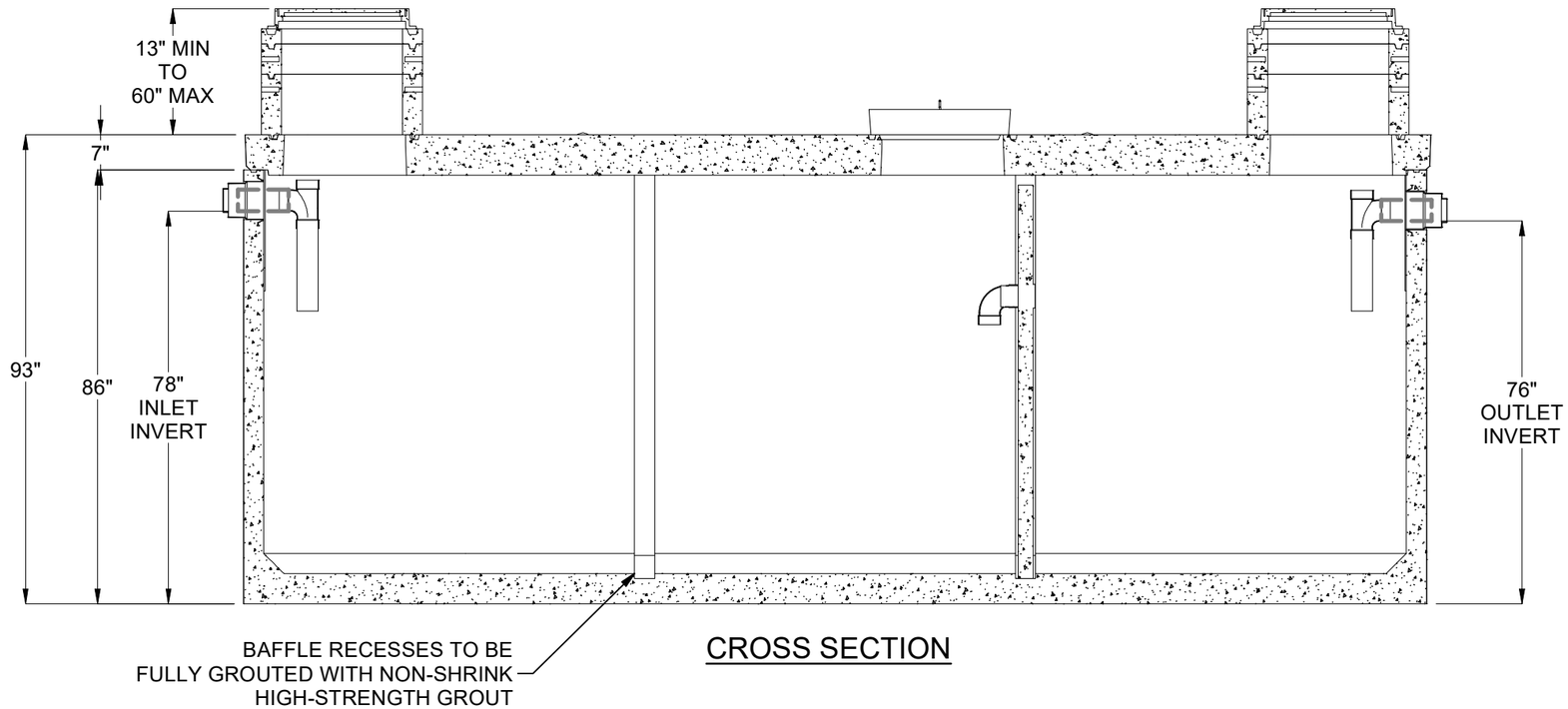

CROSS SECTION

BURY DEPTH:	1.1' - 5.0' to Top		
WATER LEVEL:	Below Structure	APPROX. WEIGHT:	41558.38 Lbs
DESIGN SPEC:	ACI 318,ASTM C890	LOADING SPEC:	A-16 (AASHTO HS20-44)
AGENCY:		AGENCY SPEC:	

JENSEN PRECAST EST. 1968

WWW.JENSENPRECAST.COM

©2024 Jensen Precast- All rights reserved.
All materials appearing as Jensen Precast documents and the like are proprietary work product and are protected under U.S. copyright and other laws.
Unless in conjunction with business conducted with Jensen Precast, any use of Jensen Precast work product without express, written consent is prohibited, and recipient is prohibited from distributing any and all work product to non-approved third parties under penalty of civil action.

DESCRIPTION: Tank JOP 5000 Gallon 4 Inch Layout Septic 24"E, 24"B, 24"E Single Baffle

CASTING DRAWING

PART NUMBER:	200076489	DRAWN BY:	D. HUGHES
CREATED:	6/7/2023	MODIFIED:	9/5/2024

REV: B-1

SHEET: 2 OF 2

200076489.idw