DESIGN NOTES
■ FOR COMPLETE DESIGN AND PRODUCT INFORMATION CONTACT JENSEN PRECAST.

BILL OF MATERIALS

ITEM	UNIT QTY	QTY	PART NUMBER	DESCRIPTION
1	1	1	200076150	Vault 4646x26 Rect. Bottom Section Tacoma Water 31868
2	1	1	200076234	Vault 5656x9 Slab Top 33"x33"C Cast-In Cover Tacoma Water MIDTBD

200076380.idw

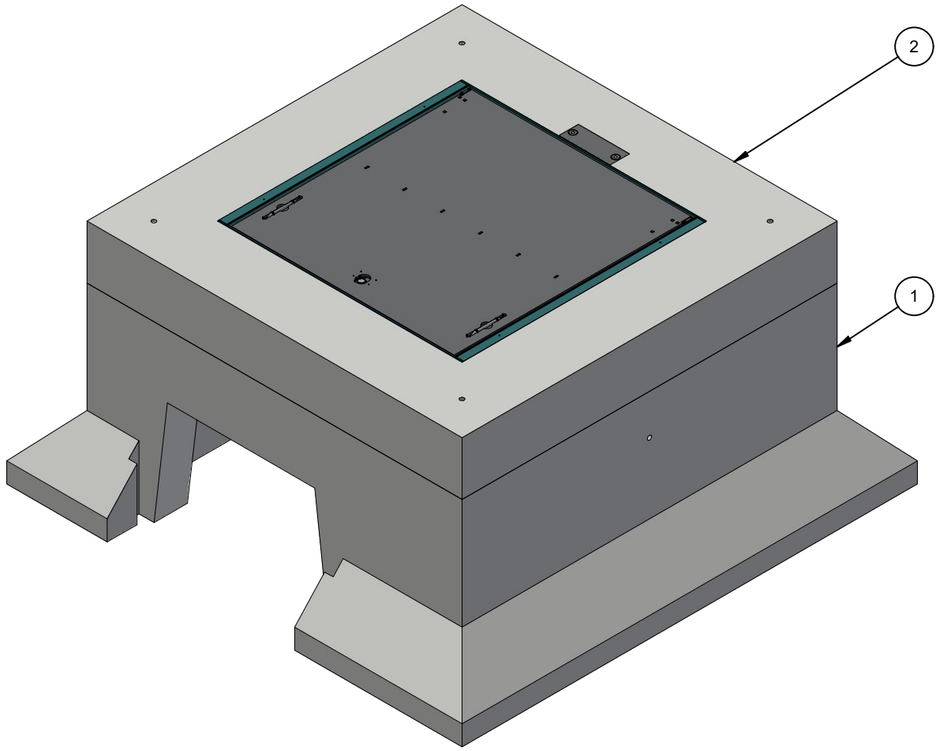

ISO VIEW

CHANGE HISTORY			
NO.	DESCRIPTION	DATE	BY
1	PRELIMINARY SUBMITTAL	6/9/2023	SD
2			
3			

BURY DEPTH:	0.0' - 0.0' to Top		
WATER LEVEL:	3.0'	APPROX. WEIGHT:	4191.93 Lbs
DESIGN SPEC:	ACI 318,ASTM C890	LOADING SPEC:	A-16 (AASHTO HS20-44)
AGENCY:	Tacoma Water	AGENCY SPEC:	

JENSEN PRECAST EST. 1968

WWW.JENSENPRECAST.COM

©2023 Jensen Precast- All rights reserved.
All materials appearing as Jensen Precast documents and the like are proprietary work product and are protected under U.S. copyright and other laws.
Unless in conjunction with business conducted with Jensen Precast, any use of Jensen Precast work product without express, written consent is prohibited, and recipient is prohibited from distributing any and all work product to non-approved third parties under penalty of civil action.

DESCRIPTION: Vault Layout 5656x26 Opening 33"x33"C Tacoma Water LAYOUT REVIEW			REV: A-7
PART NUMBER:	200076380	DRAWN BY: S. de Lange Boom	SHEET: 1 OF 2
CREATED:	6/9/2023	MODIFIED:	8/11/2023

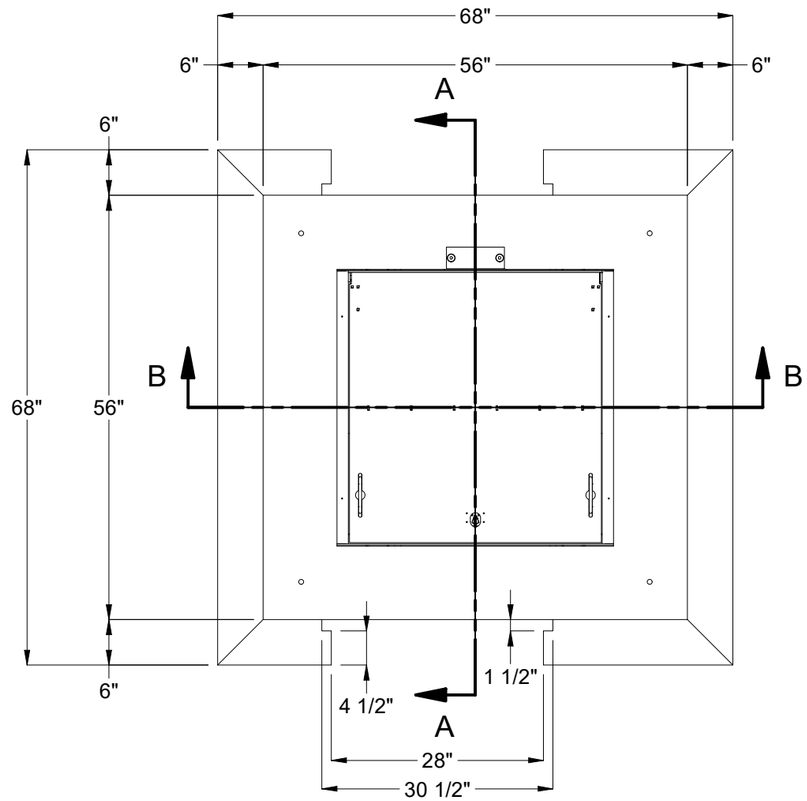

PLAN VIEW

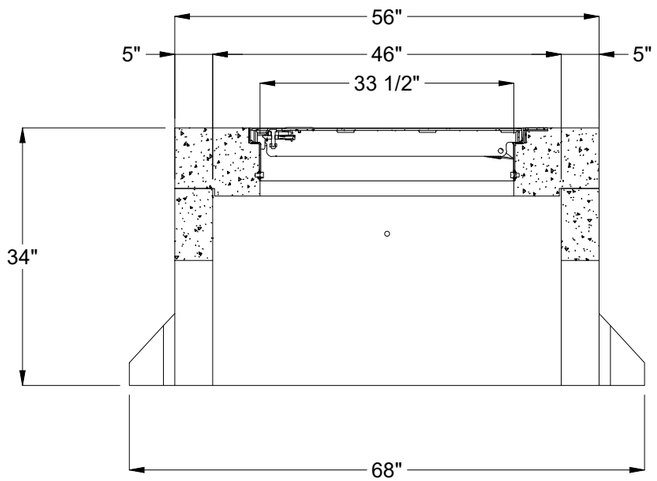

SECTION A-A

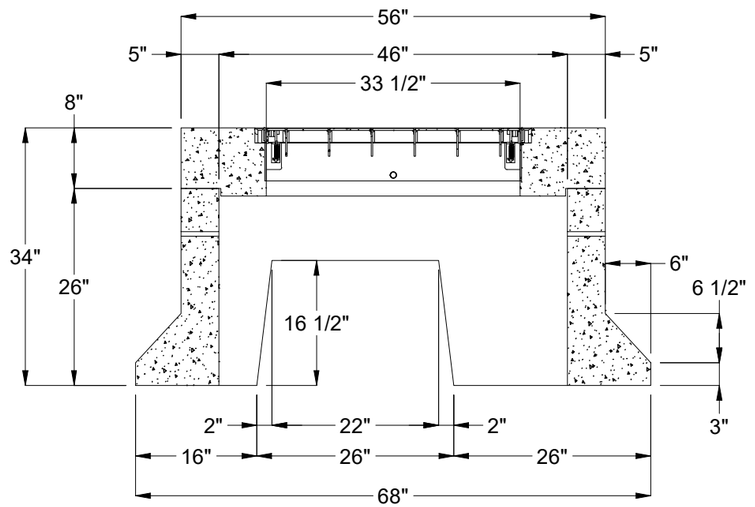

SECTION B-B

BURY DEPTH:	0.0' - 0.0' to Top		
WATER LEVEL:	3.0'	APPROX. WEIGHT:	4191.93 Lbs
DESIGN SPEC:	ACI 318,ASTM C890	LOADING SPEC:	A-16 (AASHTO HS20-44)
AGENCY:	Tacoma Water	AGENCY SPEC:	

JENSEN PRECAST EST. 1968

WWW.JENSENPRECAST.COM

©2023 Jensen Precast- All rights reserved.
All materials appearing as Jensen Precast documents and the like are proprietary work product and are protected under U.S. copyright and other laws.
Unless in conjunction with business conducted with Jensen Precast, any use of Jensen Precast work product without express, written consent is prohibited, and recipient is prohibited from distributing any and all work product to non-approved third parties under penalty of civil action.

DESCRIPTION:	Vault Layout 5656x26 Opening 33"x33"C Tacoma Water LAYOUT DRAWING		REV: A-7
PART NUMBER:	200076380	DRAWN BY:	S. de Lange Boom
CREATED:	6/9/2023	MODIFIED:	8/11/2023
			SHEET: 2 OF 2

200076380.idw