DESIGN NOTES
■ FOR COMPLETE DESIGN AND PRODUCT INFORMATION CONTACT JENSEN PRECAST.

BILL OF MATERIALS

ITEM	UNIT QTY	QTY	PART NUMBER	DESCRIPTION
1	1	1	200076172	Vault 7676x37 Rect. Bottom Section Opening Tacoma Water 31858
2	1	1	200076237	Vault 8484x7 Slab Top 33"x33"C Cast-In Cover Tacoma Water
3	JOB SPECIFIC	JOB SPECIFIC	200076250	Riser 7676x12 Tacoma Water

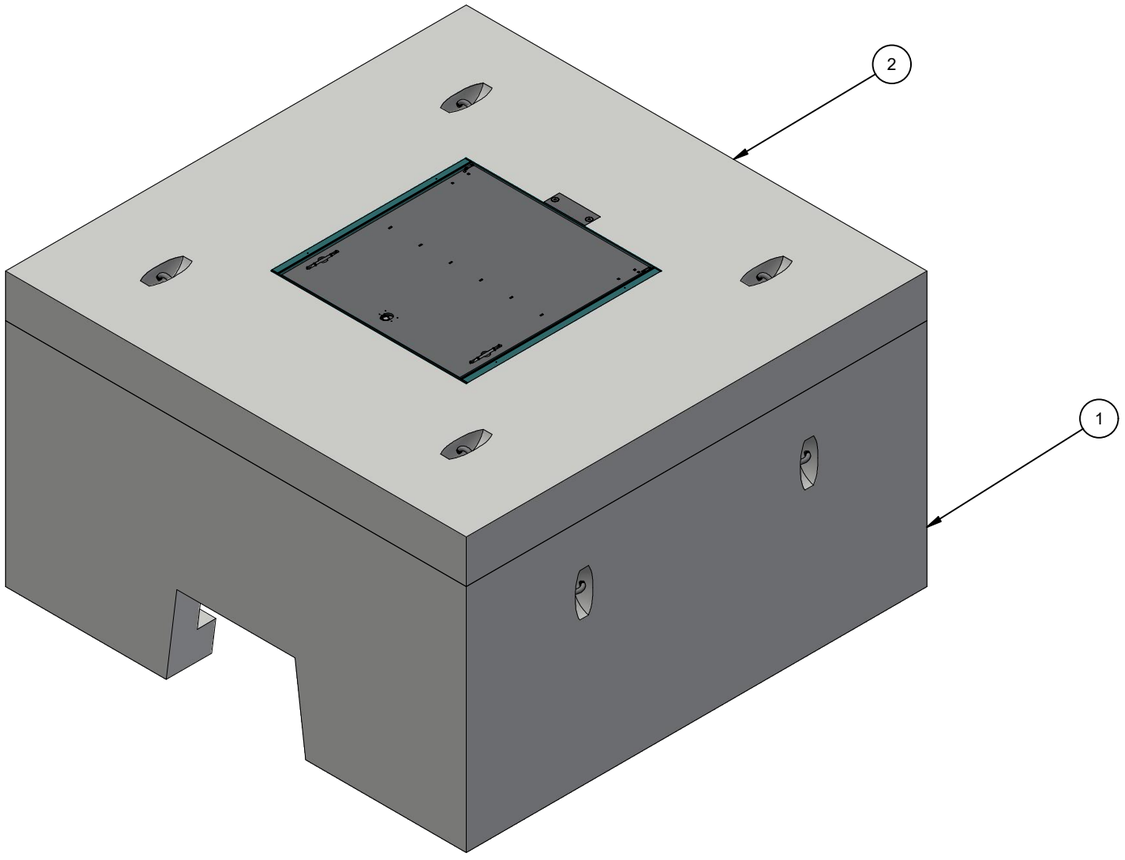

ISO VIEW

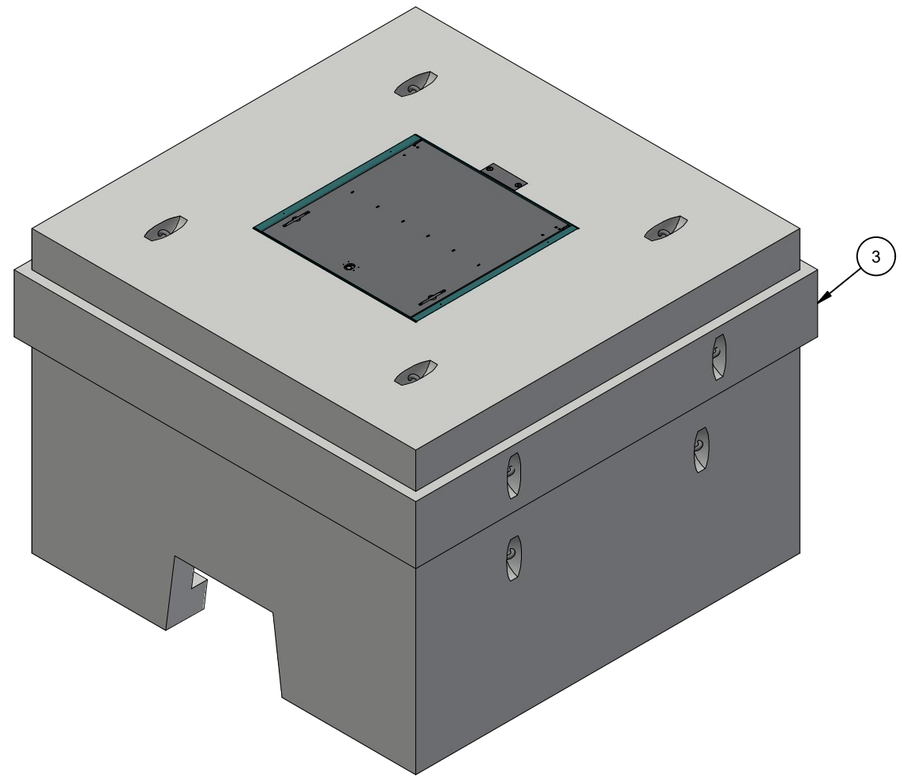

ISO VIEW
OPTIONAL ALTERNATIVE CONFIGURATION

200076379.idw

CHANGE HISTORY			
NO.	DESCRIPTION	DATE	BY
1	PRELIMINARY SUBMITTAL	6/9/2023	SD
2			
3			

BURY DEPTH:	0.0' - 0.0' to Top		
WATER LEVEL:	3.0'	APPROX. WEIGHT:	11049.1 Lbs
DESIGN SPEC:	Agency Specified	LOADING SPEC:	A-16 (AASHTO HS20-44)
AGENCY:	Tacoma Water	AGENCY SPEC:	

JENSEN PRECAST EST. 1968

WWW.JENSENPRECAST.COM

©2023 Jensen Precast- All rights reserved.
All materials appearing as Jensen Precast documents and the like are proprietary work product and are protected under U.S. copyright and other laws.
Unless in conjunction with business conducted with Jensen Precast, any use of Jensen Precast work product without express, written consent is prohibited, and recipient is prohibited from distributing any and all work product to non-approved third parties under penalty of civil action.

DESCRIPTION:	Vault Layout 7676x37 Opening 33"x33"C Tacoma Water LAYOUT REVIEW		REV: A-7
PART NUMBER:	200076379	DRAWN BY: S. de Lange Boom	SHEET: 1 OF 2
CREATED:	6/9/2023	MODIFIED: 8/11/2023	

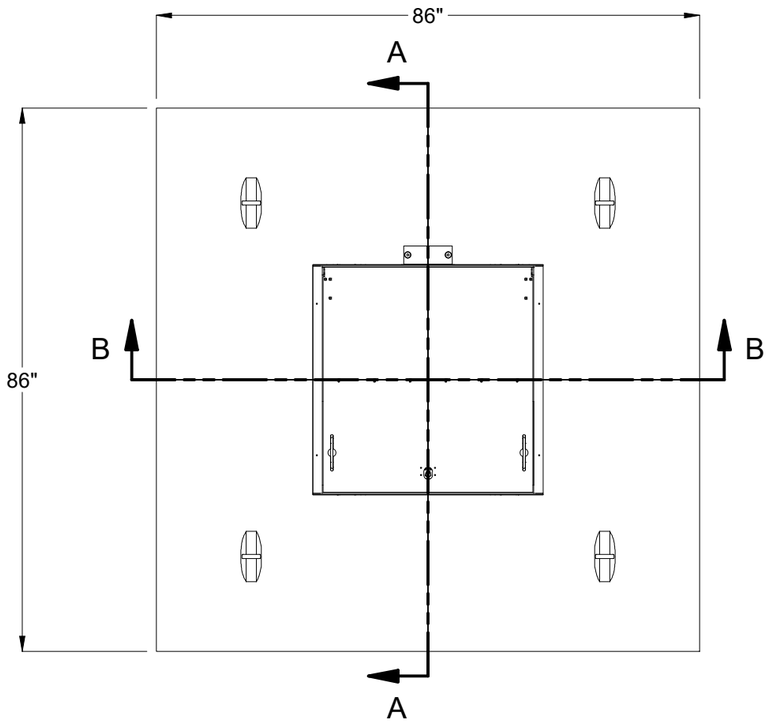

PLAN VIEW

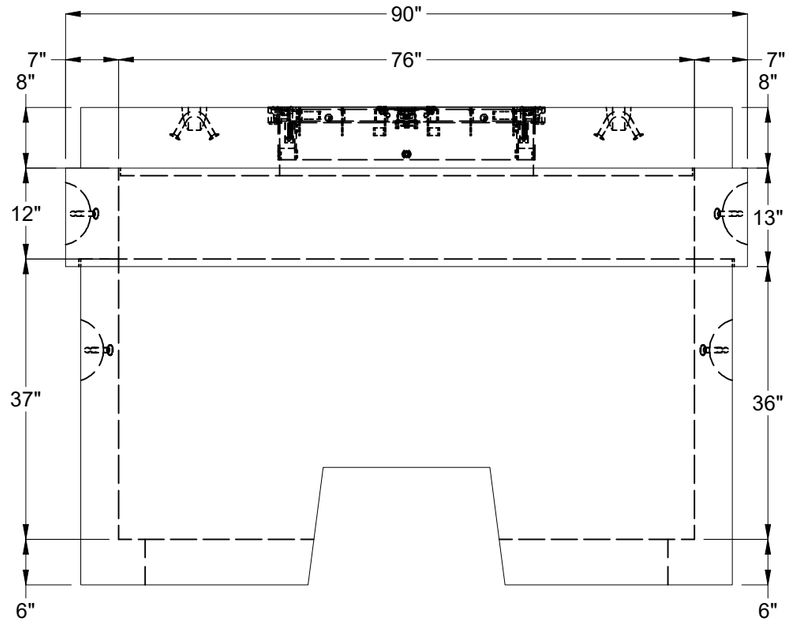

ELEVATION VIEW

OPTIONAL ALTERNATIVE CONFIGURATION

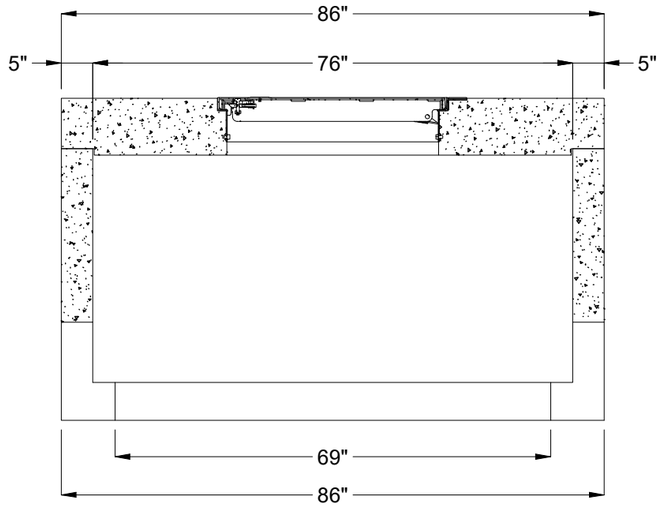

SECTION A-A

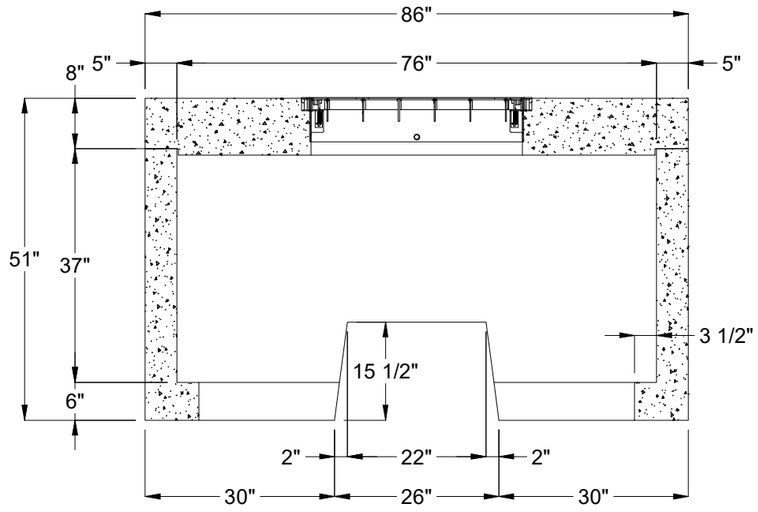

SECTION B-B

BURY DEPTH:	0.0' - 0.0' to Top		
WATER LEVEL:	3.0'	APPROX. WEIGHT:	11049.1 Lbs
DESIGN SPEC:	Agency Specified	LOADING SPEC:	A-16 (AASHTO HS20-44)
AGENCY:	Tacoma Water	AGENCY SPEC:	

JENSEN PRECAST EST. 1968

WWW.JENSENPRECAST.COM

©2023 Jensen Precast- All rights reserved.
All materials appearing as Jensen Precast documents and the like are proprietary work product and are protected under U.S. copyright and other laws.
Unless in conjunction with business conducted with Jensen Precast, any use of Jensen Precast work product without express, written consent is prohibited, and recipient is prohibited from distributing any and all work product to non-approved third parties under penalty of civil action.

DESCRIPTION:	Vault Layout 7676x37 Opening 33"x33"C Tacoma Water LAYOUT DRAWING		REV: A-7
PART NUMBER:	200076379	DRAWN BY:	S. de Lange Boom
CREATED:	6/9/2023	MODIFIED:	8/11/2023
			SHEET: 2 OF 2

200076379.idw