DESIGN NOTES
■ FOR COMPLETE DESIGN AND PRODUCT INFORMATION CONTACT JENSEN PRECAST.

BILL OF MATERIALS

ITEM	UNIT QTY	QTY	PART NUMBER	DESCRIPTION
1	1	1	200076137	Vault 5151x26 Rect. Bottom Section Tacoma Water 31869
2	1	1	200076188	Vault 5151x8 Slab Top 33"x33"C Cast-In Cover Assembly Tacoma Water 31863

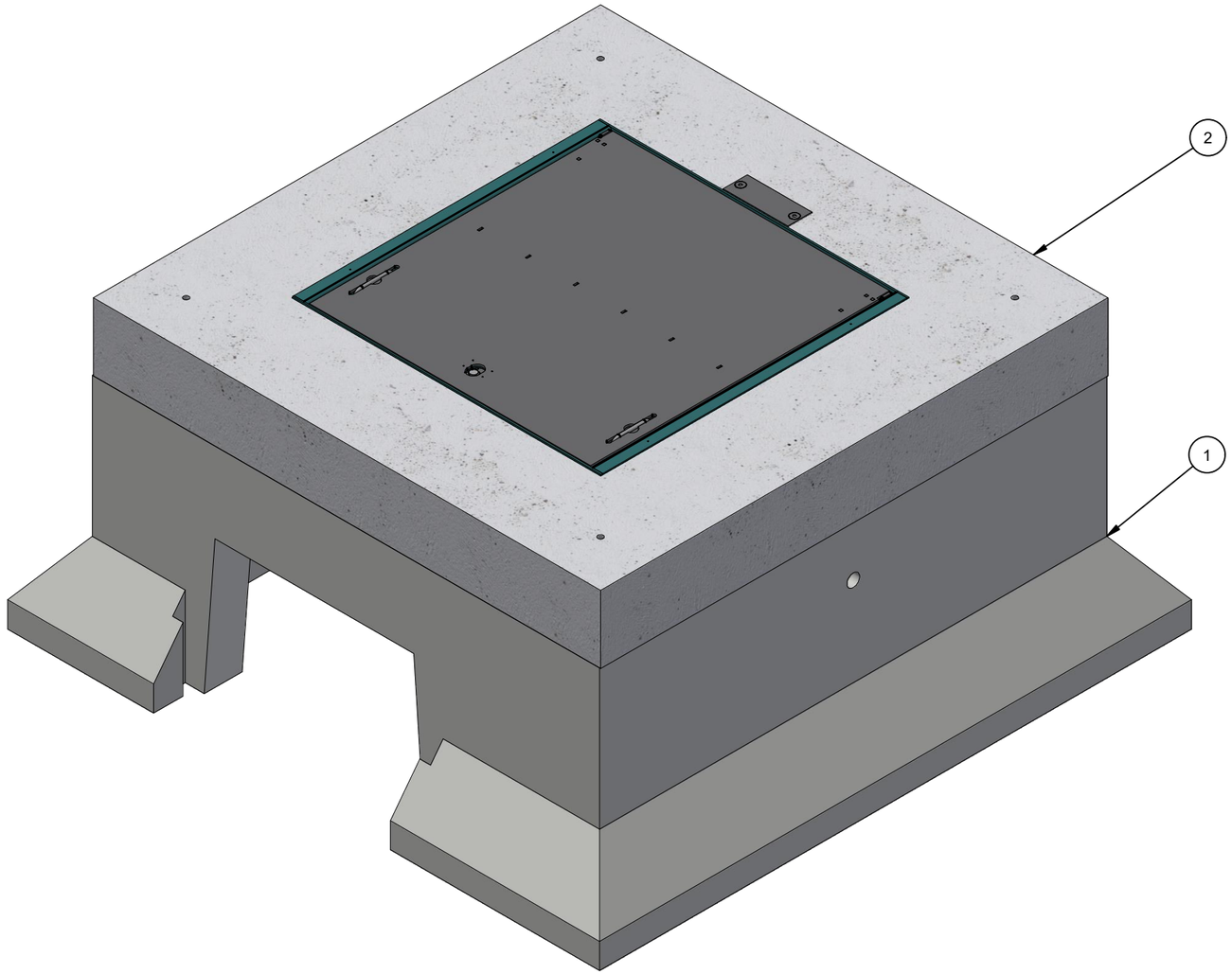

ISO VIEW

CHANGE HISTORY			
NO.	DESCRIPTION	DATE	BY
1	PRELIMINARY SUBMITTAL	6/9/2023	SD
2			
3			

BURY DEPTH:	0.0' - 0.0' to Top		
WATER LEVEL:	3.0'	APPROX. WEIGHT:	4465.16 Lbs
DESIGN SPEC:	ACI 318,ASTM C890	LOADING SPEC:	A-16 (AASHTO HS20-44)
AGENCY:	Tacoma Water	AGENCY SPEC:	

JENSEN PRECAST EST. 1968

WWW.JENSENPRECAST.COM

©2023 Jensen Precast- All rights reserved.
All materials appearing as Jensen Precast documents and the like are proprietary work product and are protected under U.S. copyright and other laws.
Unless in conjunction with business conducted with Jensen Precast, any use of Jensen Precast work product without express, written consent is prohibited, and recipient is prohibited from distributing any and all work product to non-approved third parties under penalty of civil action.

DESCRIPTION:	Vault Layout 6060x26 Opening 33"x33"C Tacoma Water LAYOUT REVIEW		REV: A-4
PART NUMBER:	200076373	DRAWN BY: S. de Lange Boom	SHEET: 1 OF 2
CREATED:	6/9/2023	MODIFIED: 8/10/2023	

200076373.idw

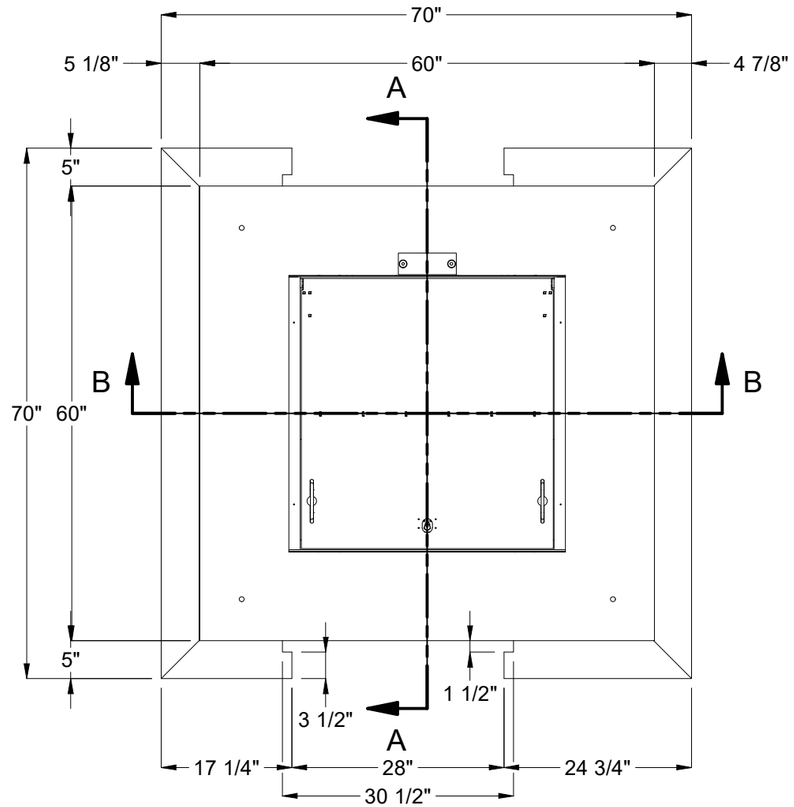

PLAN VIEW

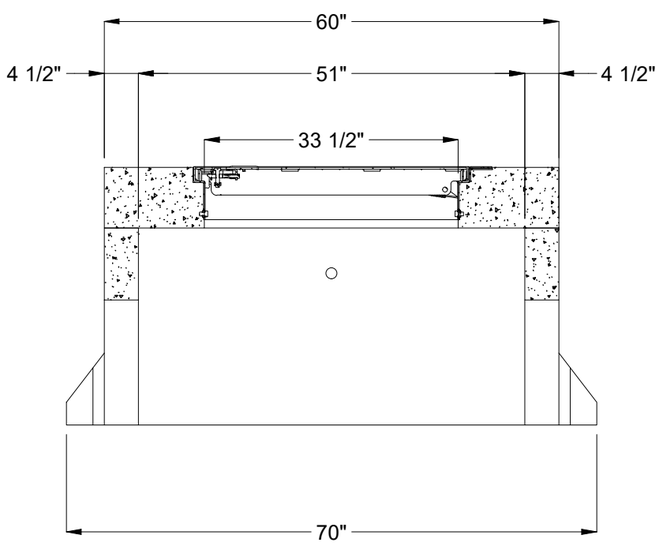

SECTION A-A

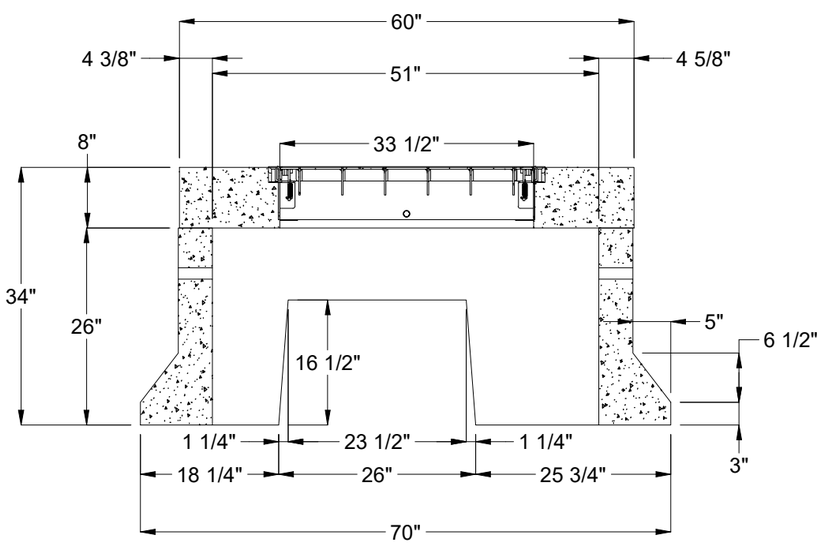

SECTION B-B

BURY DEPTH:	0.0' - 0.0' to Top		
WATER LEVEL:	3.0'	APPROX. WEIGHT:	4465.16 Lbs
DESIGN SPEC:	ACI 318,ASTM C890	LOADING SPEC:	A-16 (AASHTO HS20-44)
AGENCY:	Tacoma Water	AGENCY SPEC:	

JENSEN PRECAST EST. 1968

WWW.JENSENPRECAST.COM

©2023 Jensen Precast- All rights reserved.
All materials appearing as Jensen Precast documents and the like are proprietary work product and are protected under U.S. copyright and other laws.
Unless in conjunction with business conducted with Jensen Precast, any use of Jensen Precast work product without express, written consent is prohibited, and recipient is prohibited from distributing any and all work product to non-approved third parties under penalty of civil action.

DESCRIPTION:	Vault Layout 6060x26 Opening 33"x33"C Tacoma Water LAYOUT DRAWING		REV: A-4
PART NUMBER:	200076373	DRAWN BY:	S. de Lange Boom
CREATED:	6/9/2023	MODIFIED:	8/10/2023
			SHEET: 2 OF 2

200076373.idw