NOTES
■ FOR COMPLETE DESIGN AND PRODUCT INFORMATION CONTACT JENSEN PRECAST.

BILL OF MATERIALS

ITEM	UNIT QTY	QTY	PART NUMBER	DESCRIPTION
1	9.622 ft^3	9.622 ft^3	100011429	CONCRETE MIX GENERIC 7000 PSI
2	1	4	100039973	Insert Ferrule Loop 0.625 x 3.5" 304SS (F42 or Equiv.)
5	1	1	300153607	REINFORCING MAT 300153607
6	1	1	200061796	CAS1-3333-CHF4-DP-G-BD-GR-SL-PNW-OH07-332

200076234.idw

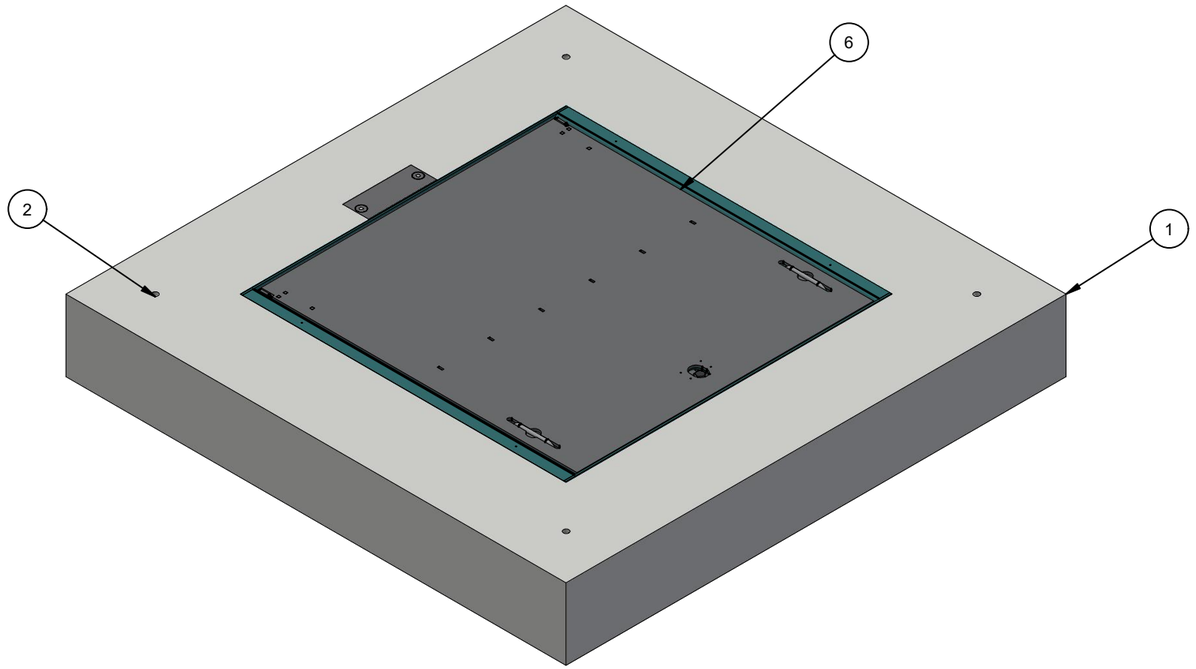

ISO LAYOUT

LIFTING NOTES
■ THIS CONCRETE PRODUCT IS DESIGNED TO BE LIFTED AT 3000 PSI WITH 4 LIFT CONNECTIONS EQUALLY LOADED TO 2 LIFTING POINTS AT A MINIMUM 60° SLING ANGLE, MEASURED FROM HORIZONTAL.

BURY DEPTH:	0.0' - 0.0' to Top		
WATER LEVEL:	3.0'	APPROX. WEIGHT:	1622.53 Lbs
DESIGN SPEC:	ACI 318,ASTM C890	LOADING SPEC:	A-16 (AASHTO HS20-44)
REINFORCEMENT TYPE:	Rebar	LIFTING TYPE:	Insert

JENSEN PRECAST EST. 1968

WWW.JENSENPRECAST.COM

©2023 Jensen Precast- All rights reserved.
All materials appearing as Jensen Precast documents and the like are proprietary work product and are protected under U.S. copyright and other laws.
Unless in conjunction with business conducted with Jensen Precast, any use of Jensen Precast work product without express, written consent is prohibited, and recipient is prohibited from distributing any and all work product to non-approved third parties under penalty of civil action.

CHANGE HISTORY			
NO.	DESCRIPTION	DATE	BY
1	PRELIMINARY SUBMITTAL - 2306-55393	6/6/2023	SD
2			
3			

DESCRIPTION: Vault 5656x9 Slab Top 33"x33"C Cast-In Cover Tacoma Water MIDTBD

CASTING LAYOUT

REV: A-8

PART NUMBER:	200076234	DRAWN BY:	S. de Lange Boom
CREATED:	6/6/2023	MODIFIED:	8/10/2023

SHEET: 1 OF 2

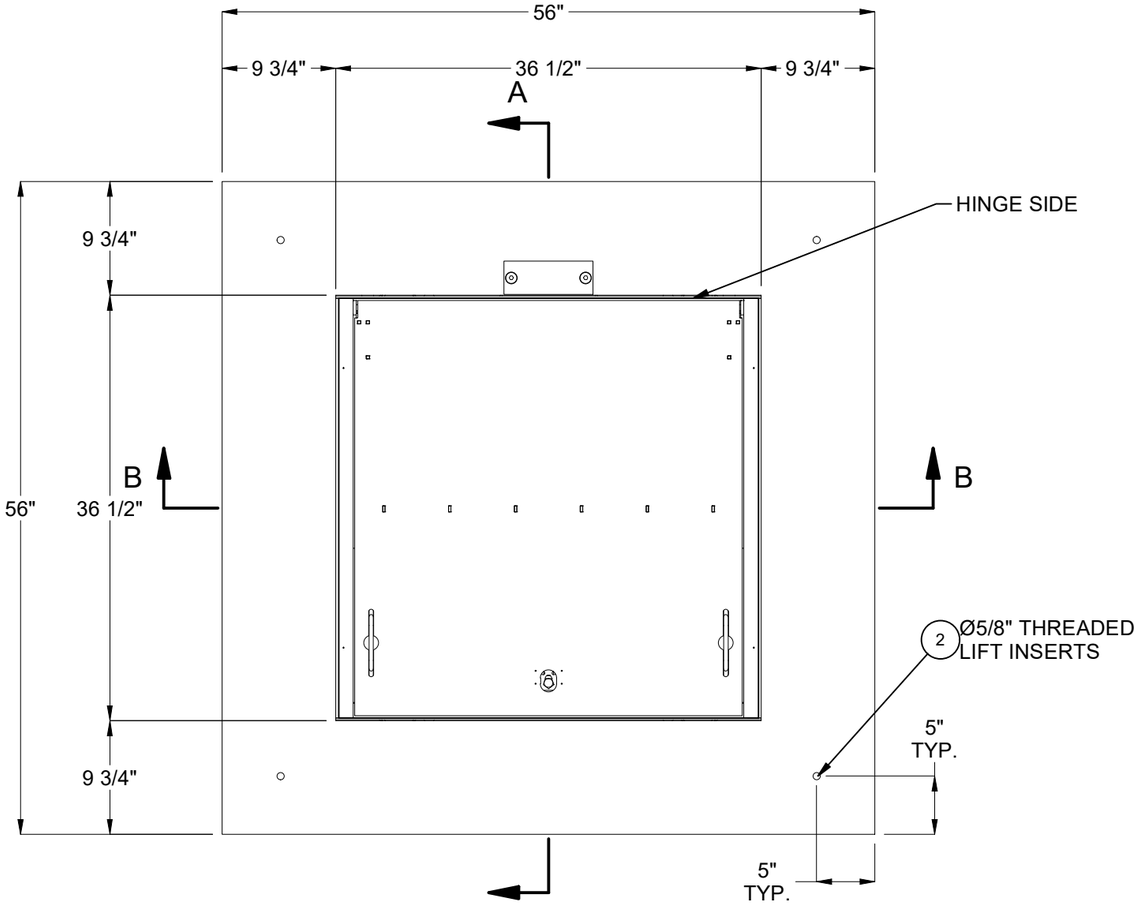

PLAN VIEW

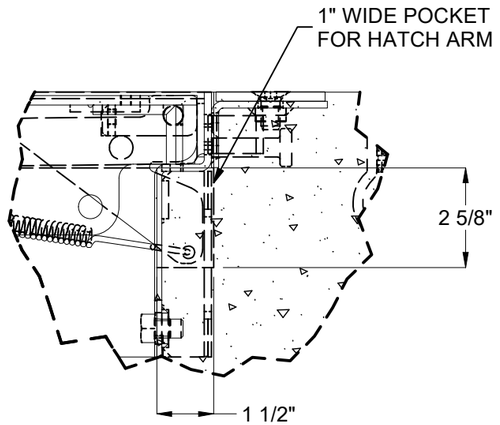

DETAIL A
(HATCH ARM POCKET)

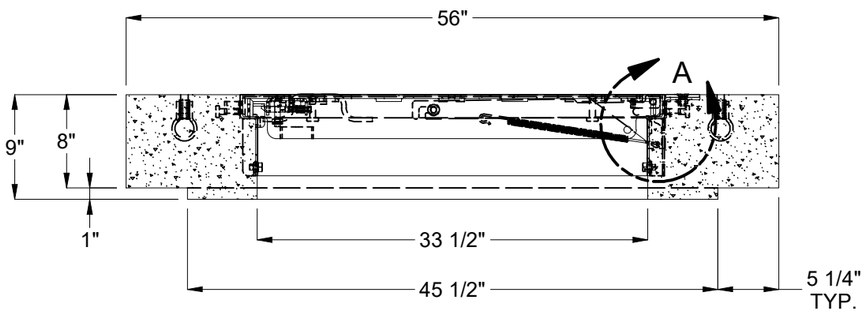

SECTION A-A

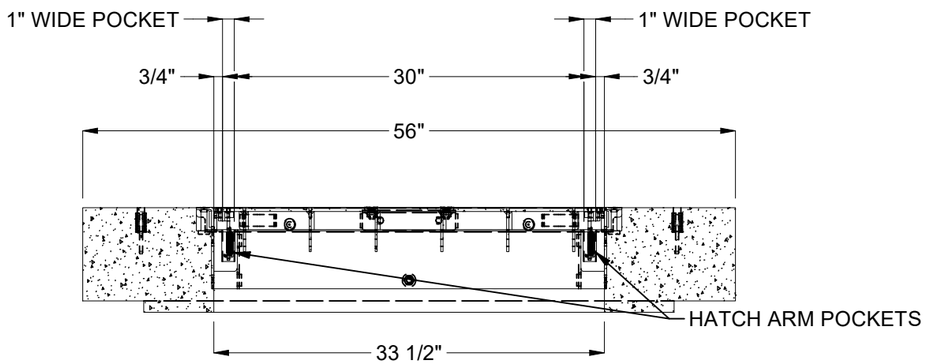

SECTION B-B

BURY DEPTH:	0.0' - 0.0' to Top		
WATER LEVEL:	3.0'	APPROX. WEIGHT:	1622.53 Lbs
DESIGN SPEC:	ACI 318,ASTM C890	LOADING SPEC:	A-16 (AASHTO HS20-44)
REINFORCEMENT TYPE:	Rebar	LIFTING TYPE:	Insert

JENSEN PRECAST EST. 1968

WWW.JENSENPRECAST.COM

©2023 Jensen Precast- All rights reserved.
All materials appearing as Jensen Precast documents and the like are proprietary work product and are protected under U.S. copyright and other laws.
Unless in conjunction with business conducted with Jensen Precast, any use of Jensen Precast work product without express, written consent is prohibited, and recipient is prohibited from distributing any and all work product to non-approved third parties under penalty of civil action.

DESCRIPTION:	Vault 5656x9 Slab Top 33"x33"C Cast-In Cover Tacoma Water MIDTBD CASTING DRAWING		REV: A-8
PART NUMBER:	200076234	DRAWN BY:	S. de Lange Boom
CREATED:	6/6/2023	MODIFIED:	8/10/2023
			SHEET: 2 OF 2

200076234.idw