NOTES
■ FOR COMPLETE DESIGN AND PRODUCT INFORMATION CONTACT JENSEN PRECAST.

BILL OF MATERIALS

ITEM	UNIT QTY	QTY	PART NUMBER	DESCRIPTION
1	40.963 ft^3	40.963 ft^3	100011425	CONCRETE MIX GENERIC 5000 PSI
2	1	4	100004878	ANCHOR UTILITY .671DIA 5-SLAB GALV P75 5UA671
3	1	1	300153397	REINFORCING MAT 300153397

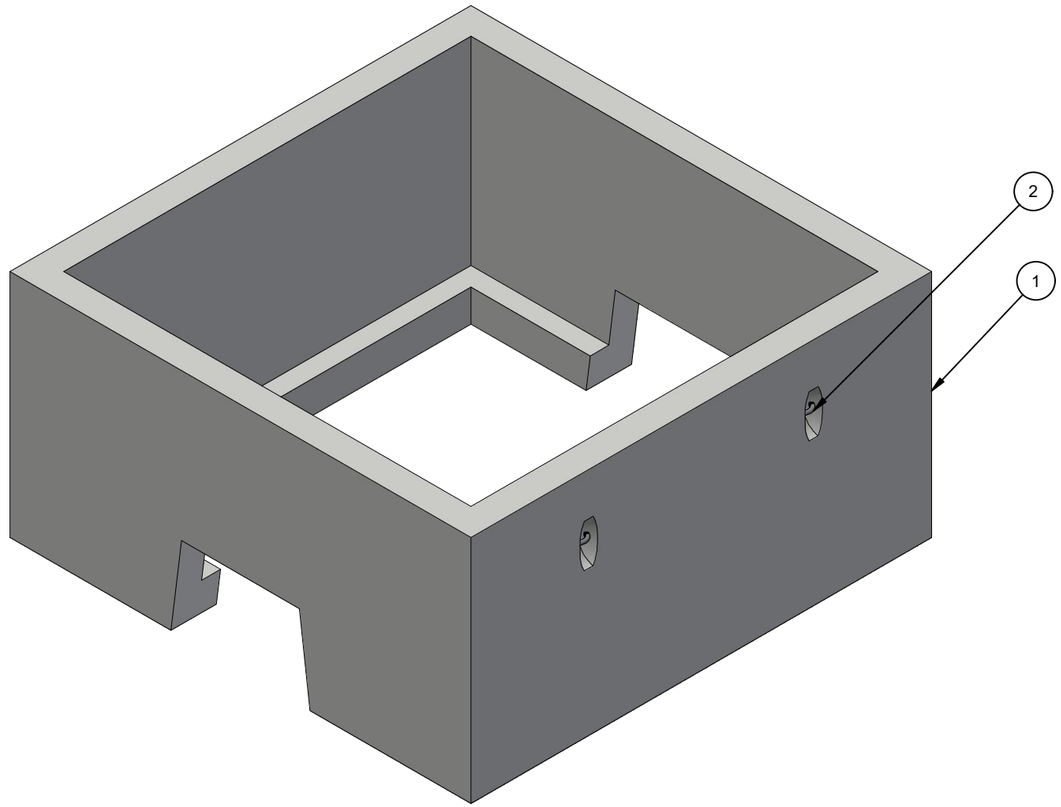

ISO VIEW

LIFTING NOTES
■ THIS CONCRETE PRODUCT IS DESIGNED TO BE LIFTED AT 2500PSI WITH 4 LIFT CONNECTIONS EQUALLY LOADED TO 4 LIFTING POINTS AT A MINIMUM 60° SLING ANGLE, MEASURED FROM HORIZONTAL.

BURY DEPTH:	0.7' - 1.7' to Top		
WATER LEVEL:	3.0'	APPROX. WEIGHT:	6160.02 Lbs
DESIGN SPEC:	ACI 318,ASTM C890	LOADING SPEC:	A-16 (AASHTO HS20-44)
REINFORCEMENT TYPE:	Rebar	LIFTING TYPE:	A-Anchor

JENSEN PRECAST EST. 1968

WWW.JENSENPRECAST.COM

©2023 Jensen Precast- All rights reserved.
All materials appearing as Jensen Precast documents and the like are proprietary work product and are protected under U.S. copyright and other laws.
Unless in conjunction with business conducted with Jensen Precast, any use of Jensen Precast work product without express, written consent is prohibited, and recipient is prohibited from distributing any and all work product to non-approved third parties under penalty of civil action.

CHANGE HISTORY			
NO.	DESCRIPTION	DATE	BY
1	PRELIMINARY SUBMITTAL	6/5/2023	SD
2	ADDED REINFORCING DRAWING	7/24/2023	SD
3			

DESCRIPTION: Vault 7676x37 Rect. Bottom Section Opening Tacoma Water 31858

CASTING LAYOUT

PART NUMBER:	200076172	DRAWN BY:	S. de Lange Boom
CREATED:	6/5/2023	MODIFIED:	8/11/2023

REV: A-9

SHEET: 1 OF 2

200076172.idw

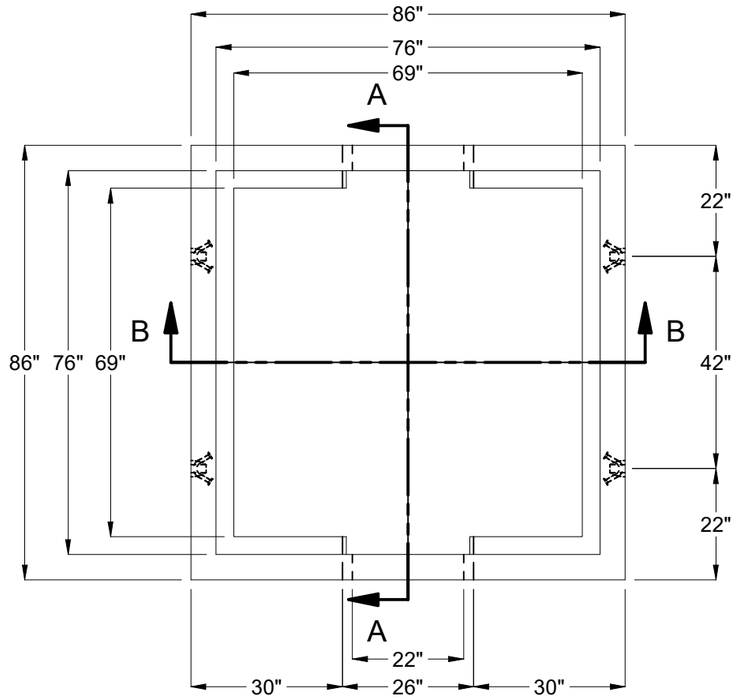

PLAN VIEW

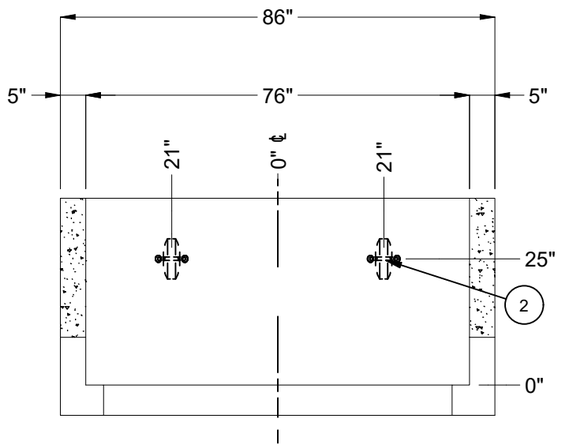

SECTION A-A

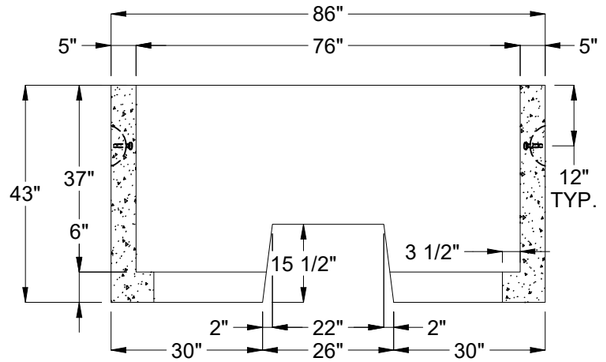

SECTION B-B

BURY DEPTH:	0.7' - 1.7' to Top			DESCRIPTION: Vault 7676x37 Rect. Bottom Section Opening Tacoma Water 31858 CASTING DRAWING	REV: A-9
WATER LEVEL:	3.0'	APPROX. WEIGHT:	6160.02 Lbs		
DESIGN SPEC:	ACI 318,ASTM C890	LOADING SPEC:	A-16 (AASHTO HS20-44)	PART NUMBER: 200076172 / DRAWN BY: S. de Lange Boom	SHEET: 2 OF 2
REINFORCEMENT TYPE:	Rebar	LIFTING TYPE:	A-Anchor	CREATED: 6/5/2023 / MODIFIED: 8/11/2023	

JENSEN PRECAST EST. 1968

WWW.JENSENPRECAST.COM

©2023 Jensen Precast- All rights reserved.
All materials appearing as Jensen Precast documents and the like are proprietary work product and are protected under U.S. copyright and other laws.
Unless in conjunction with business conducted with Jensen Precast, any use of Jensen Precast work product without express, written consent is prohibited, and recipient is prohibited from distributing any and all work product to non-approved third parties under penalty of civil action.

20007617 2.idw