NOTES
■ FOR COMPLETE DESIGN AND PRODUCT INFORMATION CONTACT JENSEN PRECAST.

BILL OF MATERIALS

ITEM	UNIT QTY	QTY	PART NUMBER	DESCRIPTION
1	17.090 ft^3	17.090 ft^3	100011425	CONCRETE MIX GENERIC 5000 PSI
2	1	4	100039973	Insert Ferrule Loop 0.625 x 3.5" 304SS (F42 or Equiv.)
3	1	1	300153399	REINFORCING MAT 300153399

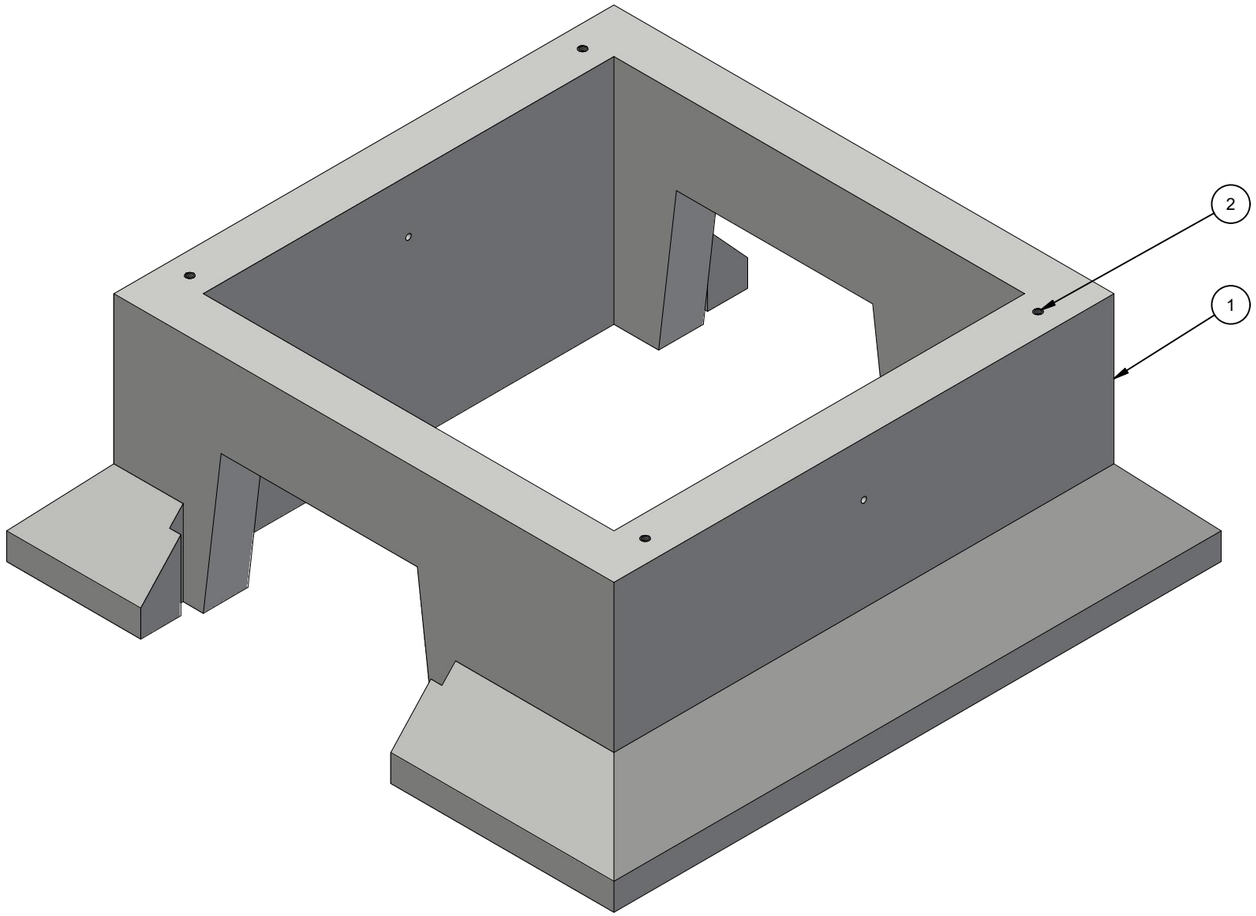

ISO VIEW

CHANGE HISTORY			
NO.	DESCRIPTION	DATE	BY
1	PRELIMINARY SUBMITTAL	6/5/2023	SD
2			
3			

BURY DEPTH:	0.0' - 0.0' to Top		
WATER LEVEL:	3.0'	APPROX. WEIGHT:	2569.4 Lbs
DESIGN SPEC:	ACI 318,ASTM C890	LOADING SPEC:	A-16 (AASHTO HS20-44)
REINFORCEMENT TYPE:	Rebar	LIFTING TYPE:	Lift Hole

JENSEN PRECAST EST. 1968

WWW.JENSENPRECAST.COM

©2023 Jensen Precast- All rights reserved.
All materials appearing as Jensen Precast documents and the like are proprietary work product and are protected under U.S. copyright and other laws.
Unless in conjunction with business conducted with Jensen Precast, any use of Jensen Precast work product without express, written consent is prohibited, and recipient is prohibited from distributing any and all work product to non-approved third parties under penalty of civil action.

DESCRIPTION:
Vault 4646x26 Rect. Bottom Section Tacoma Water 31868
CASTING LAYOUT

PART NUMBER:	200076150	DRAWN BY:	S. de Lange Boom
CREATED:	6/5/2023	MODIFIED:	8/8/2023

REV: A-7

SHEET: 1 OF 2

200076150.idw

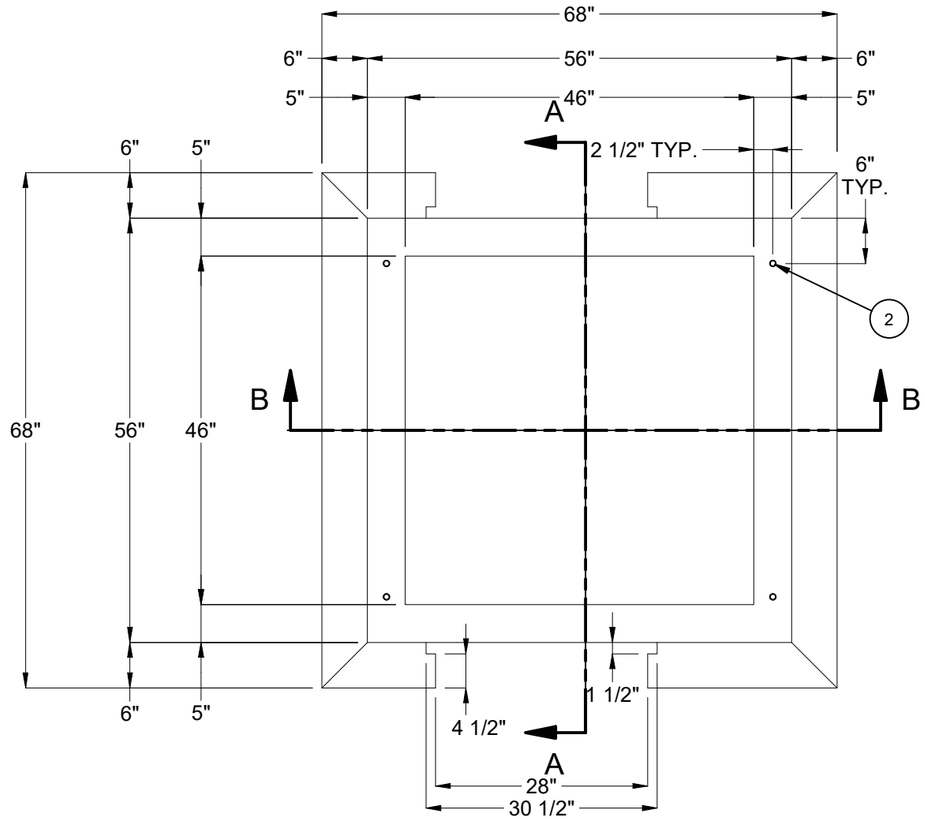

PLAN VIEW

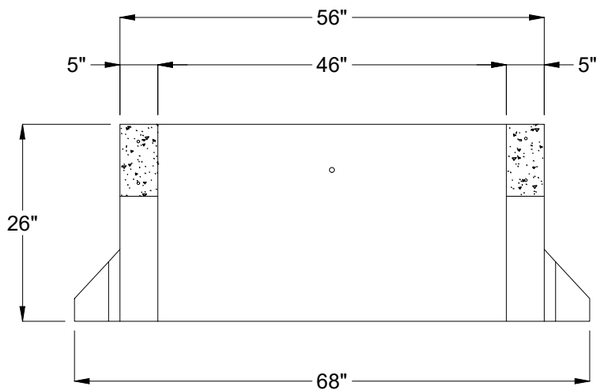

SECTION A-A

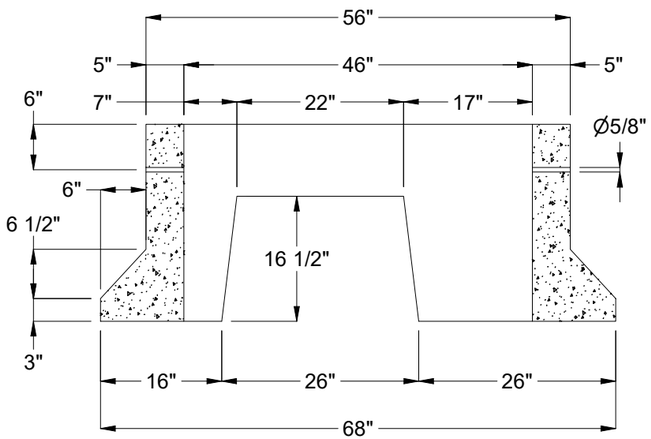

SECTION B-B

BURY DEPTH:	0.0' - 0.0' to Top		
WATER LEVEL:	3.0'	APPROX. WEIGHT:	2569.4 Lbs
DESIGN SPEC:	ACI 318,ASTM C890	LOADING SPEC:	A-16 (AASHTO HS20-44)
REINFORCEMENT TYPE:	Rebar	LIFTING TYPE:	Lift Hole

JENSEN PRECAST EST. 1968

WWW.JENSENPRECAST.COM

©2023 Jensen Precast- All rights reserved.
All materials appearing as Jensen Precast documents and the like are proprietary work product and are protected under U.S. copyright and other laws.
Unless in conjunction with business conducted with Jensen Precast, any use of Jensen Precast work product without express, written consent is prohibited, and recipient is prohibited from distributing any and all work product to non-approved third parties under penalty of civil action.

DESCRIPTION:	Vault 4646x26 Rect. Bottom Section Tacoma Water 31868 CASTING DRAWING		REV: A-7
PART NUMBER:	200076150	DRAWN BY:	S. de Lange Boom
CREATED:	6/5/2023	MODIFIED:	8/8/2023
			SHEET: 2 OF 2

200076150.idw