NOTES
■ FOR COMPLETE DESIGN AND PRODUCT INFORMATION CONTACT JENSEN PRECAST.

BILL OF MATERIALS

ITEM	UNIT QTY	QTY	PART NUMBER	DESCRIPTION
1	90.038 ft^3	90.038 ft^3	100011425	CONCRETE MIX GENERIC 5000 PSI
2	1	14	100037969	PLATE EMBED STEEL 1.5x9.75x0.375" w/ Two HCA
3	1	8	100034004	ANCHOR RAPID LIFT 8T PLATE ANCHOR MB RL-24
4	1	1	300153385	REINFORCING MAT 300153385
5	1	4	100037961	ANCHOR RAPIDLIFT ERECTION 8T MB RL-7 W/ SHEAR PLATE A-2073

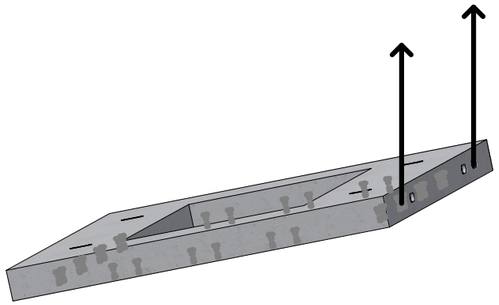

ROTATION DETAIL 1

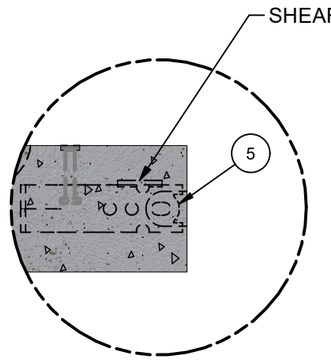

OUTER RL-7 DETAIL

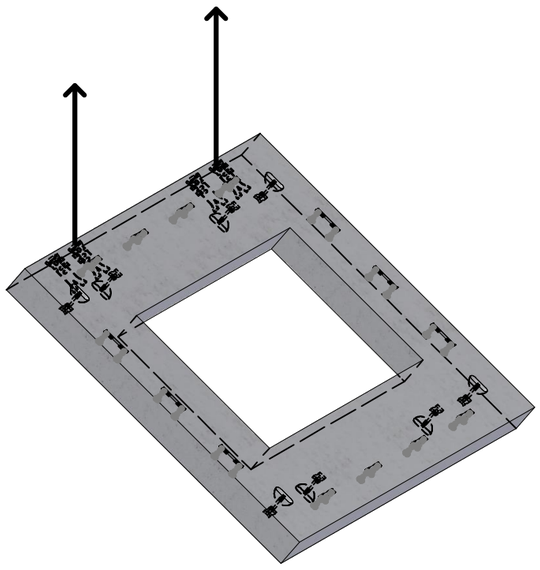

ROTATION DETAIL 2

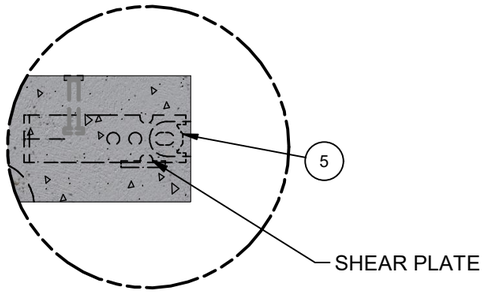

INNER RL-7 DETAIL

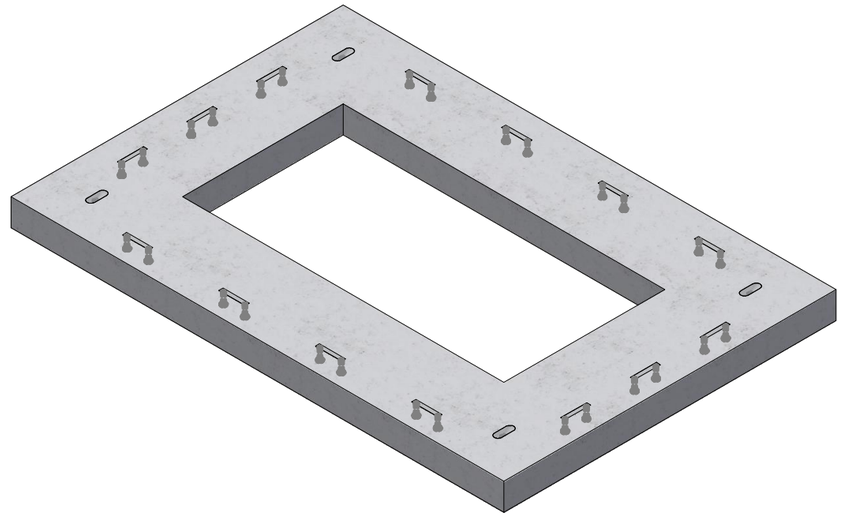

ISOMETRIC VIEW

LIFTING NOTES
■ THIS CONCRETE PRODUCT IS DESIGNED TO BE LIFTED AT 3500 PSI WITH 4 LIFT CONNECTIONS EQUALLY LOADED TO 4 LIFTING POINTS AT A MINIMUM 60° SLING ANGLE, MEASURED FROM HORIZONTAL.

BURY DEPTH:	8.0' - 9.3' to Top		
WATER LEVEL:	6.0'	APPROX. WEIGHT:	13778.35 Lbs
DESIGN SPEC:	ACI 318,ASTM C890	LOADING SPEC:	A-16 (AASHTO HS20-44)
REINFORCEMENT TYPE:	Rebar	LIFTING TYPE:	Tech Erection Anchor

JENSEN PRECAST EST. 1968

WWW.JENSENPRECAST.COM

©2023 Jensen Precast- All rights reserved.
All materials appearing as Jensen Precast documents and the like are proprietary work product and are protected under U.S. copyright and other laws.
Unless in conjunction with business conducted with Jensen Precast, any use of Jensen Precast work product without express, written consent is prohibited, and recipient is prohibited from distributing any and all work product to non-approved third parties under penalty of civil action.

CHANGE HISTORY			
NO.	DESCRIPTION	DATE	BY
1			
2			
3			

DESCRIPTION:	Panel Vault 104164 Slab Bottom Sump CASTING LAYOUT		REV: C-2
PART NUMBER:	200076049	DRAWN BY: A.Cho	SHEET: 1 OF 2
CREATED:	5/31/2023	MODIFIED: 9/11/2023	

200076049.idw

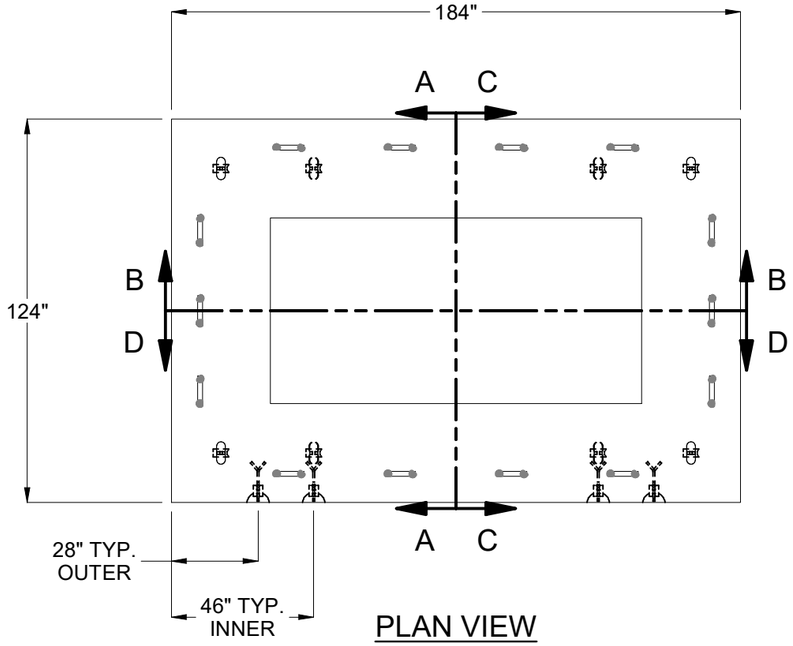

PLAN VIEW

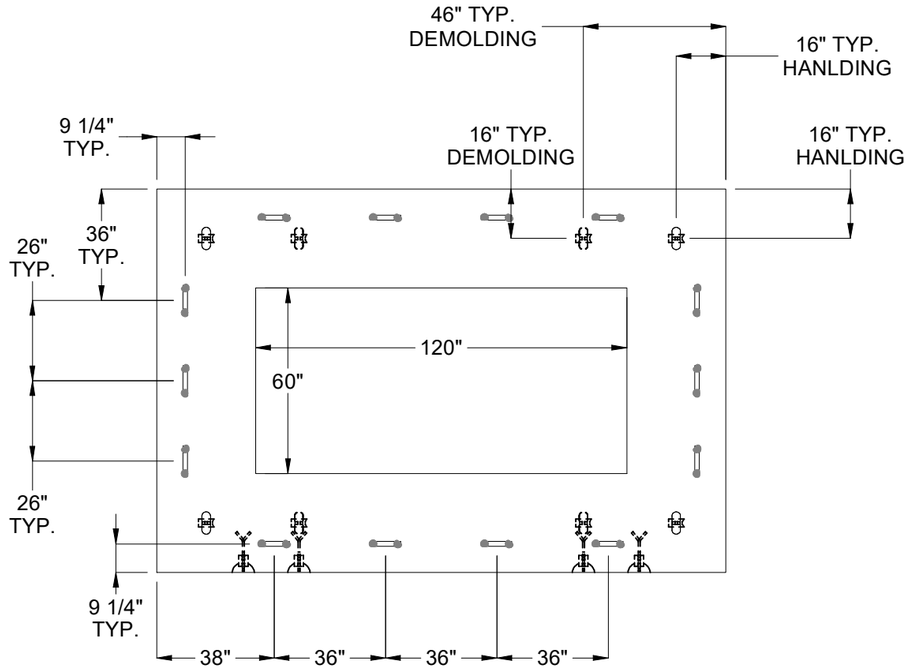

PLAN VIEW

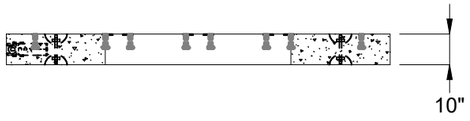

SECTION A-A



SECTION B-B

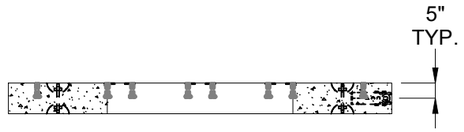

SECTION C-C



SECTION D-D

BURY DEPTH:	8.0' - 9.3' to Top		
WATER LEVEL:	6.0'	APPROX. WEIGHT:	13778.35 Lbs
DESIGN SPEC:	ACI 318,ASTM C890	LOADING SPEC:	A-16 (AASHTO HS20-44)
REINFORCEMENT TYPE:	Rebar	LIFTING TYPE:	Tech Erection Anchor

JENSEN PRECAST EST. 1968

WWW.JENSENPRECAST.COM

©2023 Jensen Precast- All rights reserved.
All materials appearing as Jensen Precast documents and the like are proprietary work product and are protected under U.S. copyright and other laws.
Unless in conjunction with business conducted with Jensen Precast, any use of Jensen Precast work product without express, written consent is prohibited, and recipient is prohibited from distributing any and all work product to non-approved third parties under penalty of civil action.

DESCRIPTION:	Panel Vault 104164 Slab Bottom Sump CASTING DRAWING		REV: C-2
PART NUMBER:	200076049	DRAWN BY:	A.Cho
CREATED:	5/31/2023	MODIFIED:	9/11/2023

SHEET: 2 OF 2

200076049.idw