DESIGN NOTES
■ FOR COMPLETE DESIGN AND PRODUCT INFORMATION CONTACT JENSEN PRECAST.

BILL OF MATERIALS

ITEM	UNIT QTY	QTY	PART NUMBER	DESCRIPTION
1	1	1	200075913	Vault 72144x13 Slab Top 101"x34"C
2	1	1	200075914	Riser 72144x44 Knockout
3	1	1	200076402	Vault 72144x42 Rect. Bottom Section Knockout Sump

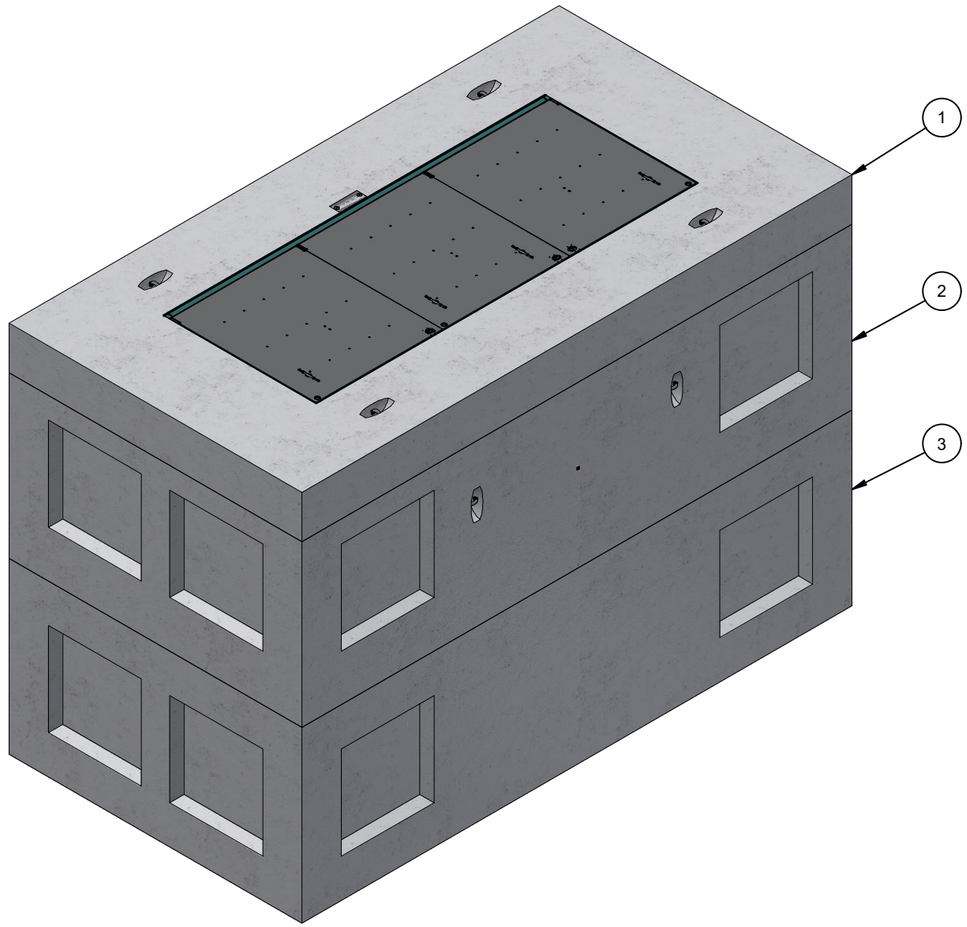

ISOMETRIC VIEW

CHANGE HISTORY			
NO.	DESCRIPTION	DATE	BY
A	DRAWING CREATED	5/24/2023	E.Fine
B	RISER LIFTING UPDATED	7/10/2023	E.Fine

BURY DEPTH:	0.0' - 0.0' to Top		
WATER LEVEL:	5.0'	APPROX. WEIGHT:	34481.78 Lbs
DESIGN SPEC:	ACI 318,ASTM C857	LOADING SPEC:	A-16 (AASHTO HS20-44)
AGENCY:		AGENCY SPEC:	

JENSEN PRECAST EST. 1968

WWW.JENSENPRECAST.COM

©2023 Jensen Precast- All rights reserved.
All materials appearing as Jensen Precast documents and the like are proprietary work product and are protected under U.S. copyright and other laws.
Unless in conjunction with business conducted with Jensen Precast, any use of Jensen Precast work product without express, written consent is prohibited, and recipient is prohibited from distributing any and all work product to non-approved third parties under penalty of civil action.

DESCRIPTION:	Vault Layout 72144x84 101"x34"C LAYOUT REVIEW		REV: B-2
PART NUMBER:	200075915	DRAWN BY:	E.Fine
CREATED:	5/24/2023	MODIFIED:	7/13/2023
			SHEET: 1 OF 2

200075915.idw

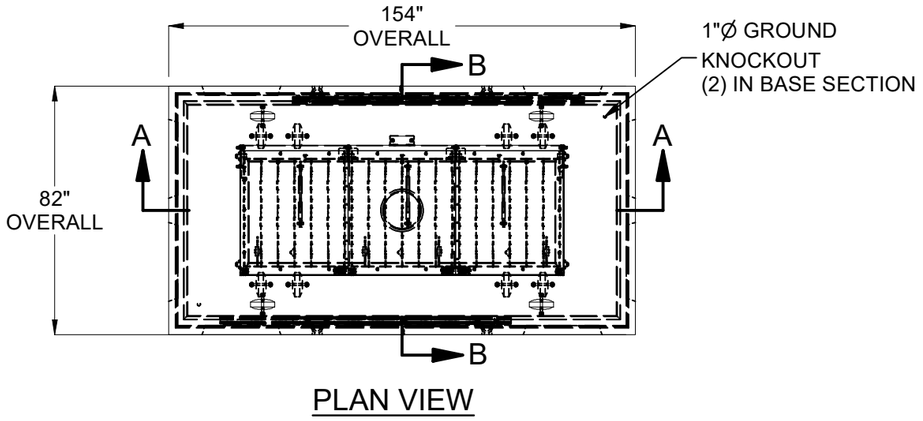

PLAN VIEW

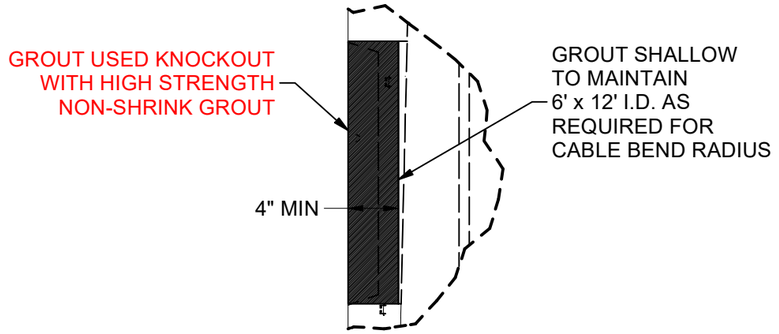

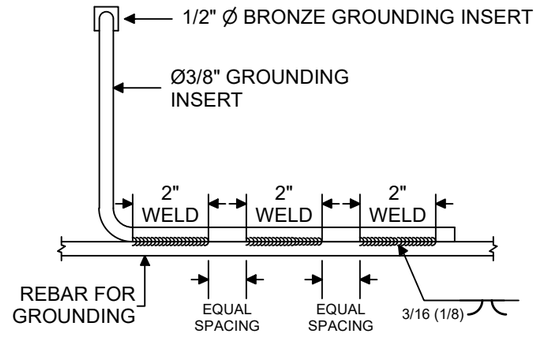

DETAIL 1

KNOCKOUT GROUT DETAIL

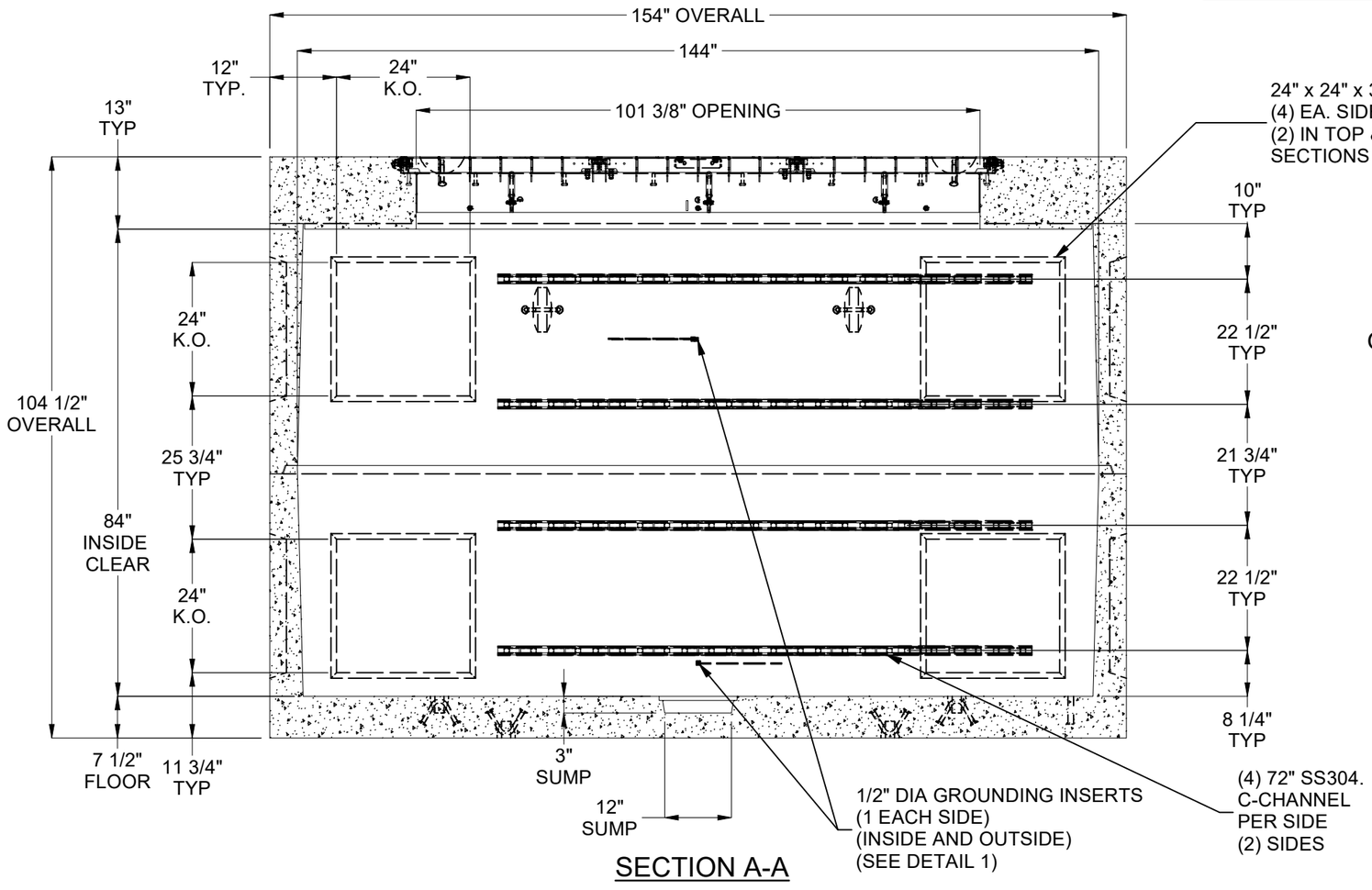

SECTION A-A

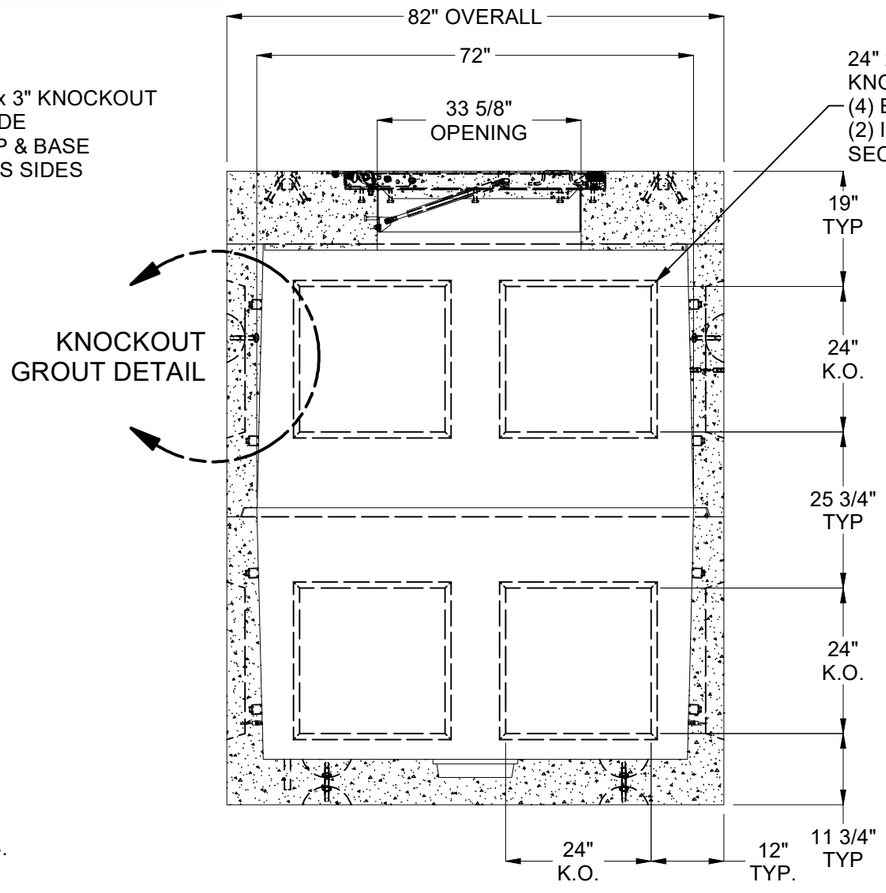

SECTION B-B

BURY DEPTH:	0.0' - 0.0' to Top		
WATER LEVEL:	5.0'	APPROX. WEIGHT:	34481.78 Lbs
DESIGN SPEC:	ACI 318,ASTM C857	LOADING SPEC:	A-16 (AASHTO HS20-44)
AGENCY:		AGENCY SPEC:	

JENSEN PRECAST EST. 1968

WWW.JENSENPRECAST.COM

©2023 Jensen Precast- All rights reserved.
All materials appearing as Jensen Precast documents and the like are proprietary work product and are protected under U.S. copyright and other laws.
Unless in conjunction with business conducted with Jensen Precast, any use of Jensen Precast work product without express, written consent is prohibited, and recipient is prohibited from distributing any and all work product to non-approved third parties under penalty of civil action.

DESCRIPTION:	Vault Layout 72144x84 101"x34"C LAYOUT DRAWING		REV: B-2
PART NUMBER:	200075915	DRAWN BY:	E.Fine
CREATED:	5/24/2023	MODIFIED:	7/13/2023
			SHEET: 2 OF 2

200075915.idw