NOTES
■ FOR COMPLETE DESIGN AND PRODUCT INFORMATION CONTACT JENSEN PRECAST.

BILL OF MATERIALS

ITEM	UNIT QTY	QTY	PART NUMBER	DESCRIPTION
1	54.064 ft^3	54.064 ft^3	100011429	CONCRETE MIX GENERIC 7000 PSI
2	1	4	100004880	ANCHOR UTILITY .671DIA 5.625-SLAB GALV P75 6UA671
3	1	4	100005933	GROUND INSERTS BOTTLE ROCKET BRASS 1/2X16 STEEL ROD 12G69
4	1	4	100042523	STRUT C-CHANNEL CONCRETE INSERT 1-5/8 X 1-5/8 12GA W/ANCHORS 304SS - 72IN
5	1	1	300153218	REINFORCING MAT 300153218

200075914.idw

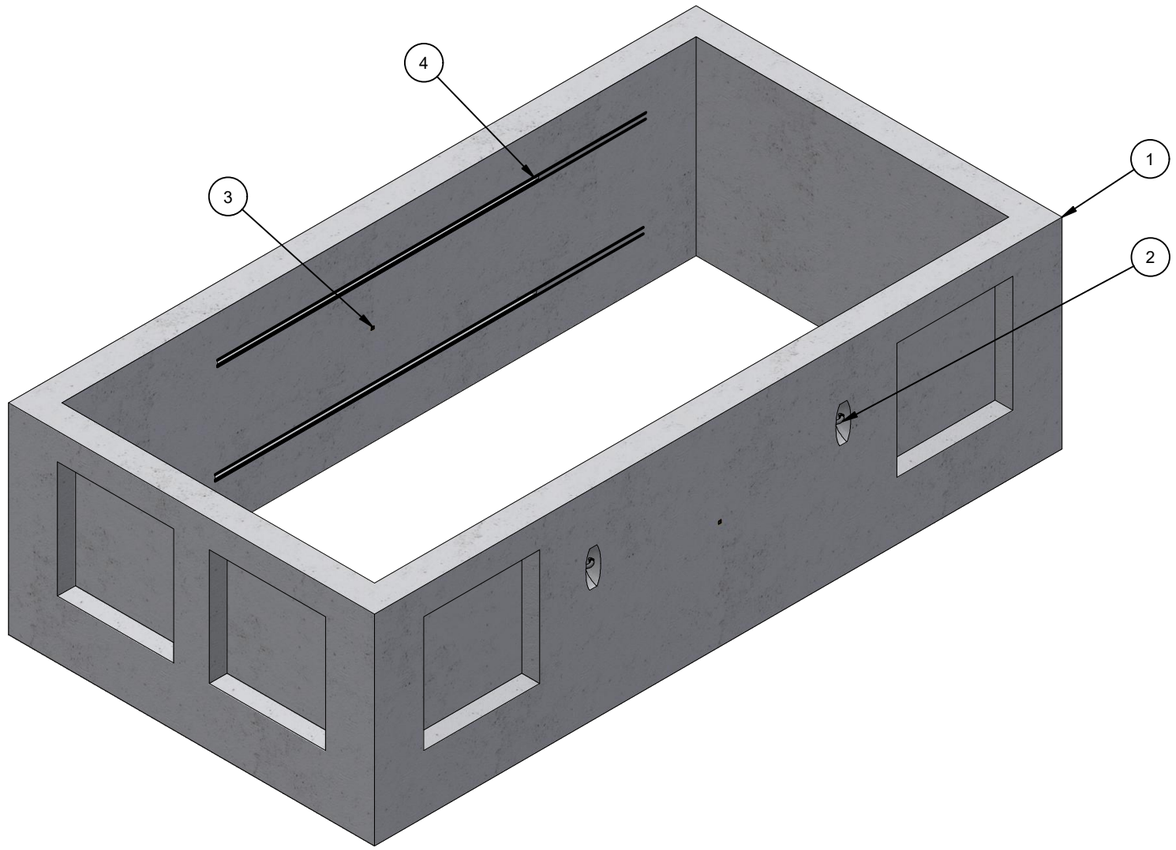

ISO LAYOUT

LIFTING NOTES
■ THIS CONCRETE PRODUCT IS DESIGNED TO BE LIFTED AT 3000 PSI WITH 4 LIFT CONNECTIONS EQUALLY LOADED TO 4 LIFTING POINTS AT A MINIMUM 60° SLING ANGLE, MEASURED FROM HORIZONTAL.

BURY DEPTH:	1.0' - 1.0' to Top		
WATER LEVEL:	Below Structure	WEIGHT:	8199.76 Lbs
DESIGN SPEC:	ACI 318,ASTM C857	LOADING SPEC:	A-16 (AASHTO HS20-44)
REINFORCEMENT TYPE:	Rebar	LIFTING TYPE:	A-Anchor

JENSEN PRECAST EST. 1968

WWW.JENSENPRECAST.COM

©2019 Jensen Precast- All rights reserved.
All materials appearing as Jensen Precast documents and the like are proprietary work product and are protected under U.S. copyright and other laws.
Unless in conjunction with business conducted with Jensen Precast, any use of Jensen Precast work product without express, written consent is prohibited, and recipient is prohibited from distributing any and all work product to non-approved third parties under penalty of civil action.

REVISION HISTORY			
REV	DESCRIPTION	DATE	BY
A	DRAWING CREATED	5/24/2023	E.Fine
B	RISER LIFTING UPDATED	7/10/2023	E.Fine

DESCRIPTION: Riser 72144x44 Knockout CASTING LAYOUT				REV: B-2
PART NUMBER:	200075914	DRAWN BY:	E.Fine	SHEET: 1 OF 2
CREATED:	5/24/2023	MODIFIED:	7/13/2023	

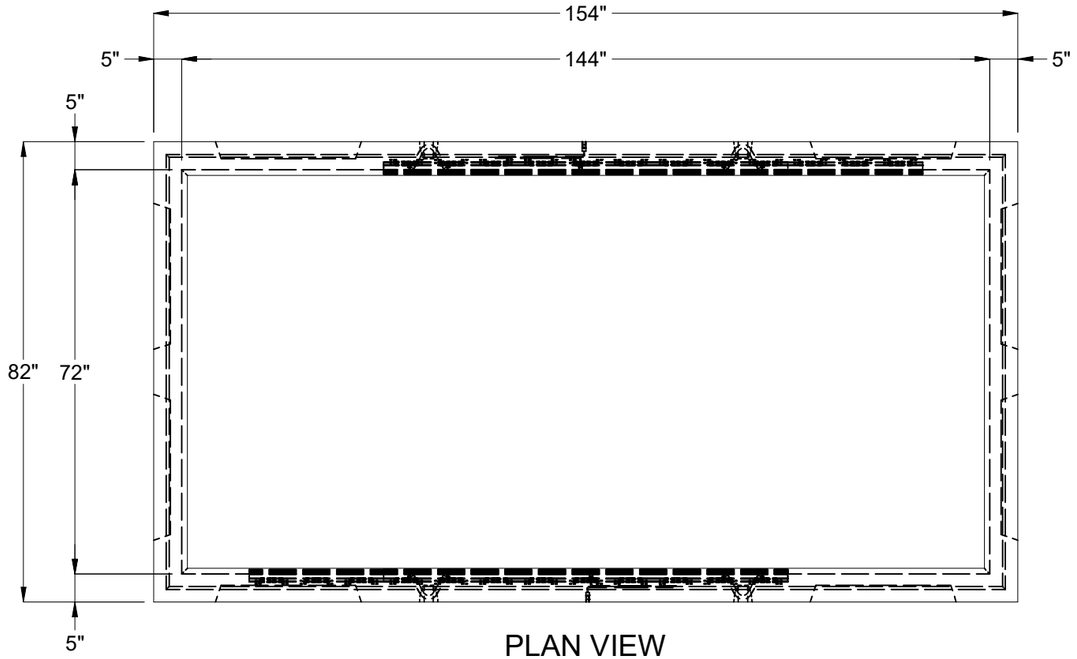

PLAN VIEW

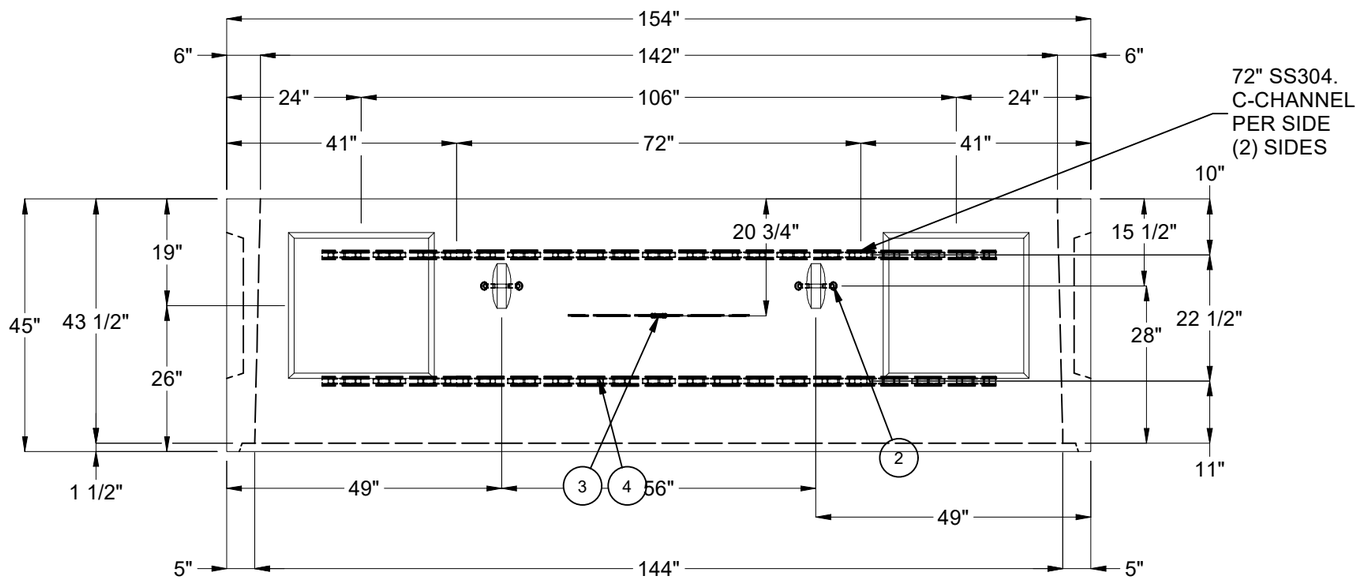

SIDE VIEW

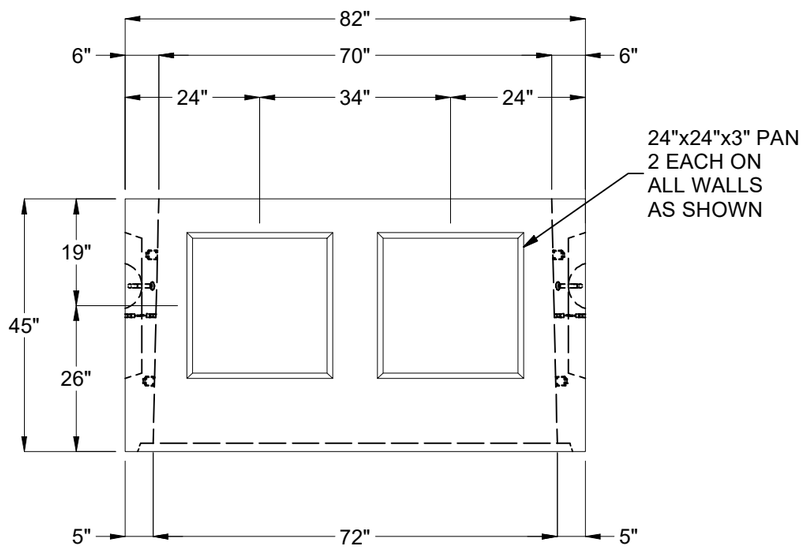

END VIEW

BURY DEPTH:	1.0' - 1.0' to Top		
WATER LEVEL:	Below Structure	WEIGHT:	8199.76 Lbs
DESIGN SPEC:	ACI 318,ASTM C857	LOADING SPEC:	A-16 (AASHTO HS20-44)
REINFORCEMENT TYPE:	Rebar	LIFTING TYPE:	A-Anchor

JENSEN PRECAST EST. 1968

WWW.JENSENPRECAST.COM

©2019 Jensen Precast- All rights reserved.
All materials appearing as Jensen Precast documents and the like are proprietary work product and are protected under U.S. copyright and other laws.
Unless in conjunction with business conducted with Jensen Precast, any use of Jensen Precast work product without express, written consent is prohibited, and recipient is prohibited from distributing any and all work product to non-approved third parties under penalty of civil action.

DESCRIPTION:	Riser 72144x44 Knockout CASTING DRAWING		REV: B-2
PART NUMBER:	200075914	DRAWN BY:	E.Fine
CREATED:	5/24/2023	MODIFIED:	7/13/2023
			SHEET: 2 OF 2

200075914.idw