NOTES

- FOR COMPLETE DESIGN AND PRODUCT INFORMATION CONTACT JENSEN PRECAST.

## BILL OF MATERIALS

| ITEM | UNIT QTY | QTY | PART NUMBER | DESCRIPTION | MASS |
|---|---|---|---|---|---|
| 1 | 1.086 ft^3 | 1.086 ft^3 | 100011427 | CONCRETE MIX GENERIC 6000 PSI | 163.202 lbmass |
| 2 | 108.000 in | 648.000 in | 100042150 | Cable Stranded 3x2.25mm Low-Relaxation ASTM A910A Grade 270 | 0.566 lbmass |

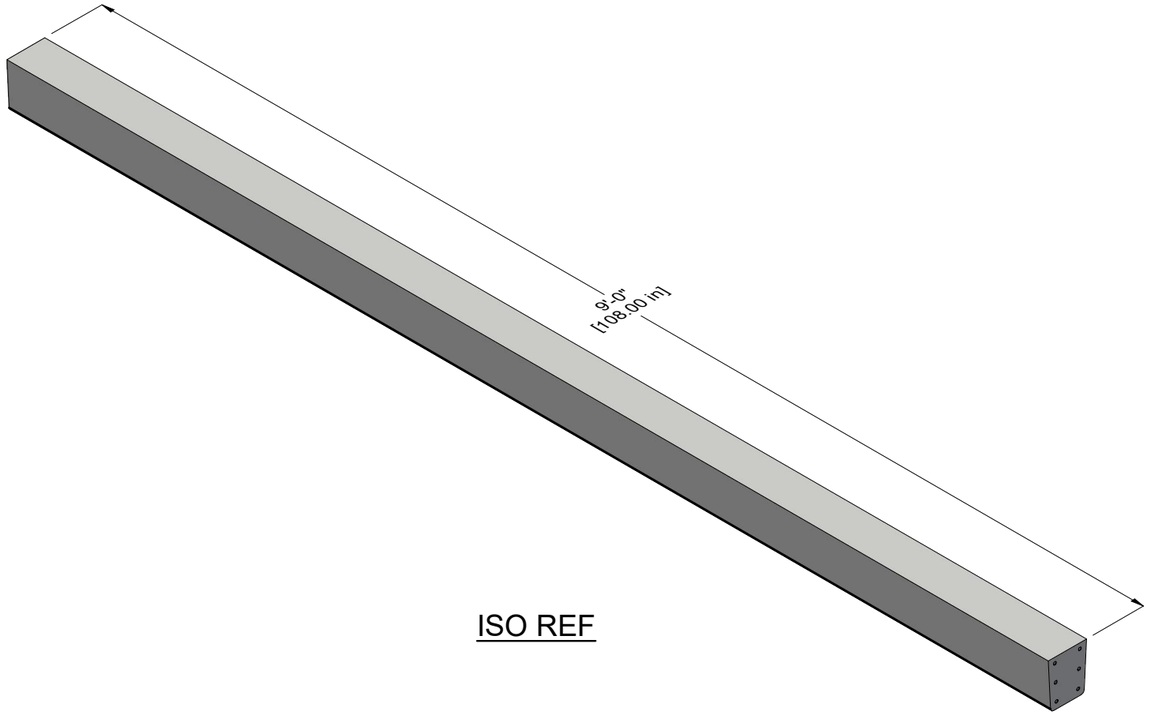


ISO REF

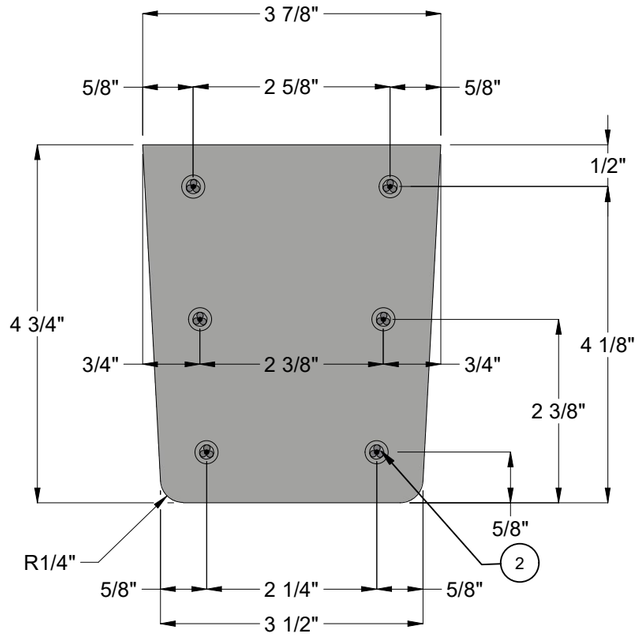


END VIEW

18.51
LBS./FT

200075571.idw

CHANGE HISTORY

| NO. | DESCRIPTION | DATE | BY |
|---|---|---|---|
| 1 | 2303-55026 | 5-5-23 | |

| | | | |
|---|---|---|---|
| BURY DEPTH: | Above Ground to N/A | | |
| WATER LEVEL: | Below Structure | APPROX. WEIGHT: | 166.6 Lbs |
| DESIGN SPEC: | Agency Specified | LOADING SPEC: | Agency Specified |
| REINFORCEMENT TYPE: | Cable Strand | LIFTING TYPE: | None |

JENSEN PRECAST EST. 1968

WWW.JENSENPRECAST.COM

©2023 Jensen Precast- All rights reserved.
All materials appearing as Jensen Precast documents and the like are proprietary work product and are protected under U.S. copyright and other laws.
Unless in conjunction with business conducted with Jensen Precast, any use of Jensen Precast work product without express, written consent is prohibited, and recipient is prohibited from distributing any and all work product to non-approved third parties under penalty of civil action.

| | | | |
|---|---|---|---|
| DESCRIPTION: | Post Prestressed Concrete 4x5x108L<br>LAYOUT | | REV: B-1 |
| PART NUMBER: | 200075571 | DRAWN BY: | MLR |
| CREATED: | 4/20/2022 | MODIFIED: | 5/24/2023 |
| | | | SHEET: 1 OF 1 |