NOTES
■ FOR COMPLETE DESIGN AND PRODUCT INFORMATION CONTACT JENSEN PRECAST.

BILL OF MATERIALS

ITEM	UNIT QTY	QTY	PART NUMBER	DESCRIPTION	MASS
1	1.533 ft^3	1.533 ft^3	100011427	CONCRETE MIX GENERIC 6000 PSI	230.411 lbmass
2	204.000 in	816.000 in	100042150	Cable Stranded 3x2.25mm Low-Relaxation ASTM A910A Grade 270	1.070 lbmass

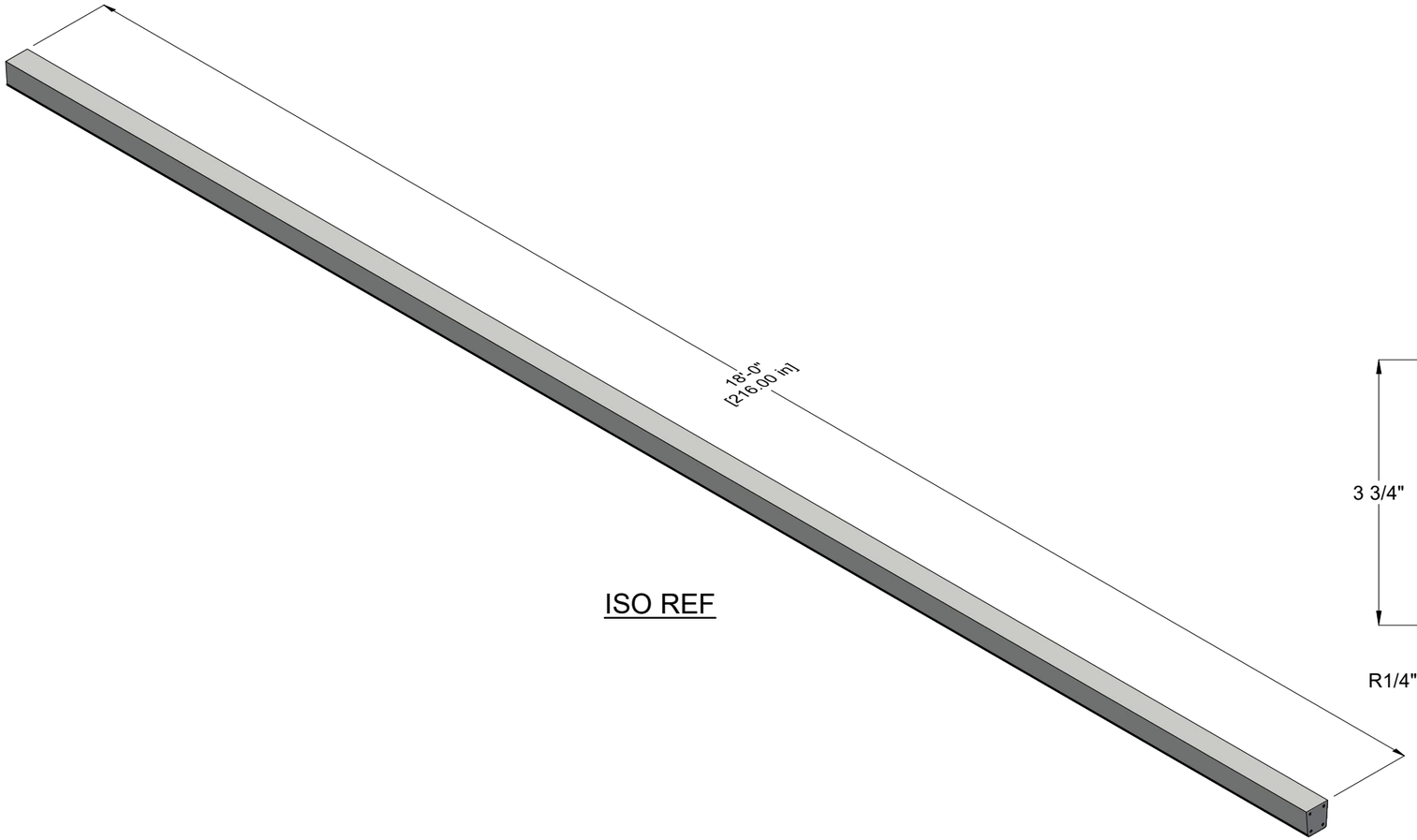

ISO REF

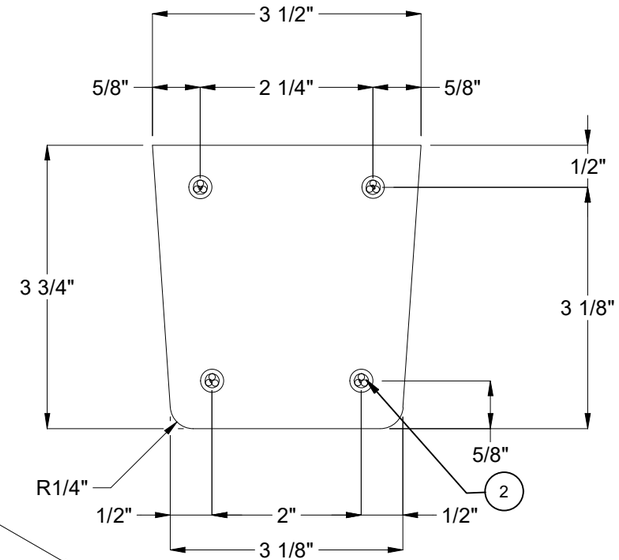

END VIEW

13.18 LBS./FT

200075521.idw

CHANGE HISTORY			
NO.	DESCRIPTION	DATE	BY
1	2303-55026	6-27-23	

BURY DEPTH:	Above Ground to N/A		
WATER LEVEL:	Below Structure	APPROX. WEIGHT:	234.69 Lbs
DESIGN SPEC:	Agency Specified	LOADING SPEC:	Agency Specified
REINFORCEMENT TYPE:	Cable Strand	LIFTING TYPE:	None

JENSEN PRECAST EST. 1968

WWW.JENSENPRECAST.COM

©2023 Jensen Precast- All rights reserved.
All materials appearing as Jensen Precast documents and the like are proprietary work product and are protected under U.S. copyright and other laws.
Unless in conjunction with business conducted with Jensen Precast, any use of Jensen Precast work product without express, written consent is prohibited, and recipient is prohibited from distributing any and all work product to non-approved third parties under penalty of civil action.

DESCRIPTION:	Post Prestressed Concrete 4x4x216L LAYOUT		REV: B
PART NUMBER:	200075521	DRAWN BY:	MLR
CREATED:	4/20/2022	MODIFIED:	6/28/2023
			SHEET: 1 OF 1