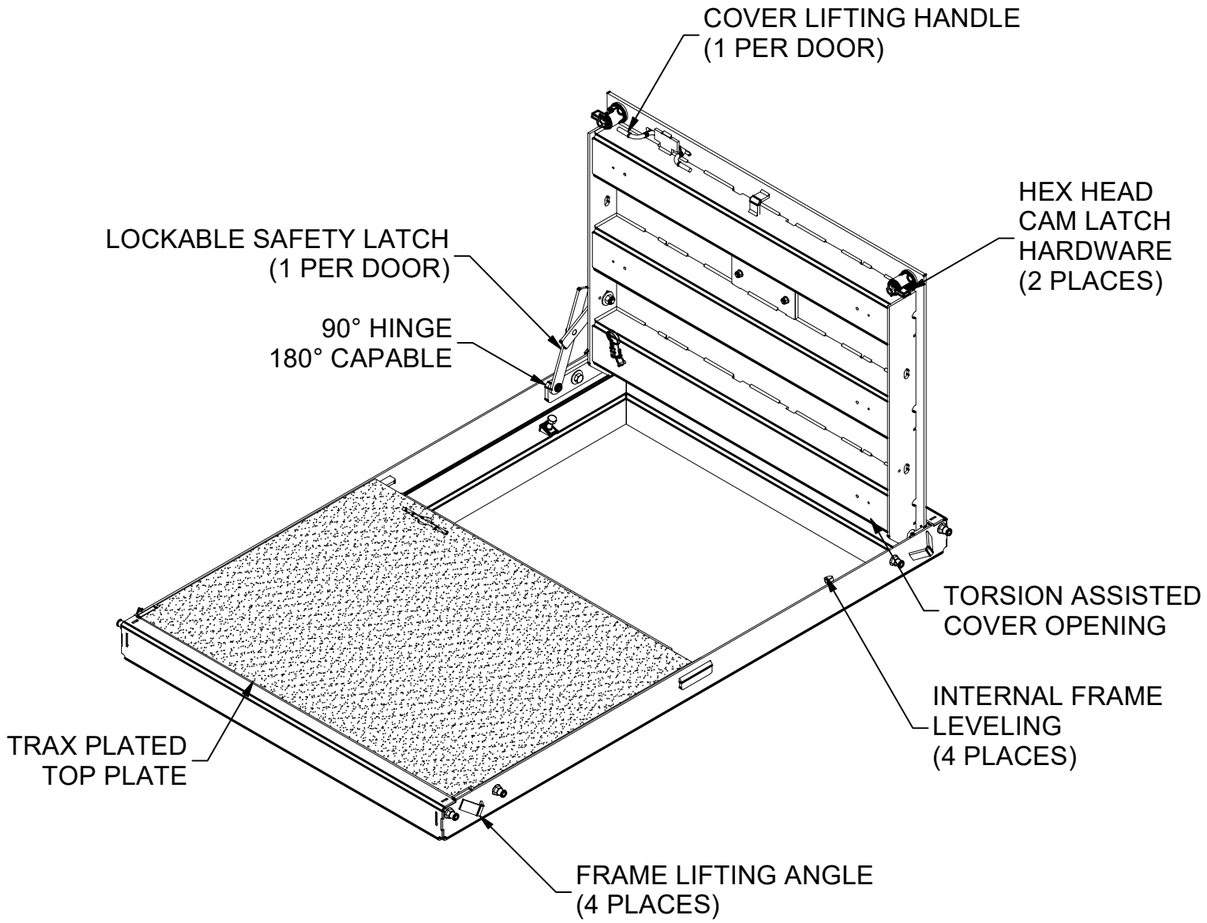

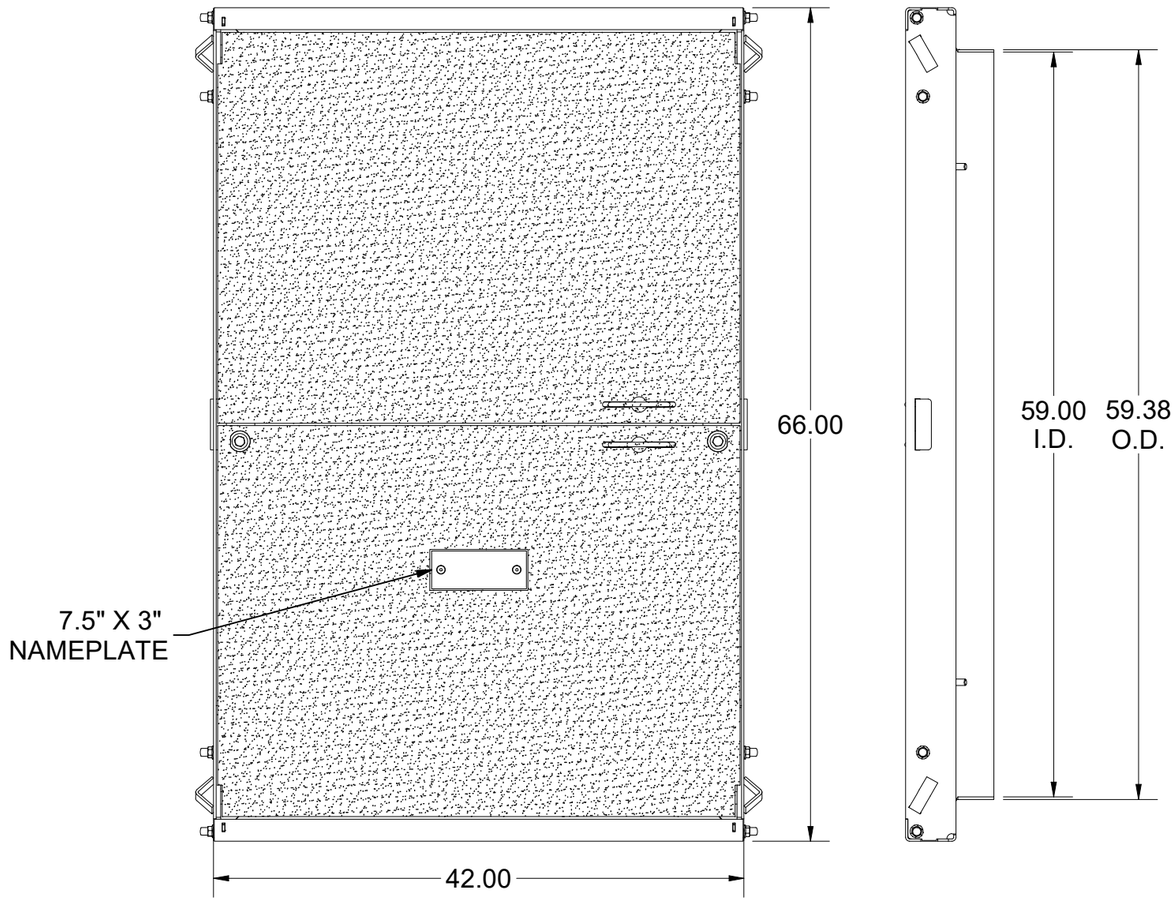

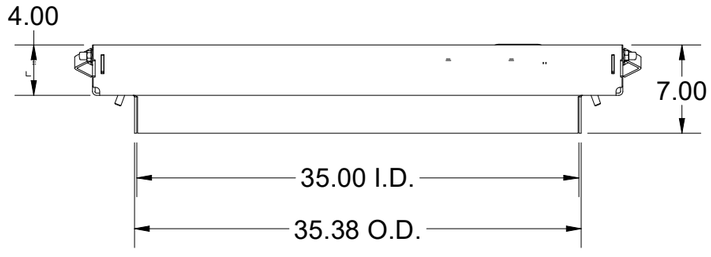

200075392.idw

LOADING CRITERIA: ASTM C1802 Load Level 05

16,000 lb load on 10" x 20" footprint, with 30% impact restricted to unrestricted parking lanes and alleyways where traffic speed is limited to 15 miles per hour.

SURFACE:	TraxPlate™	FINISH:	Galvanized
WEIGHT:	533.29 lbs	MARKING:	None

JENSEN METALTECH
450 E. GLENDALE AVE. SPARKS. NV 89431
775-352-2716 FAX: 755-358-8127
JENSENMETALTECH.COM

©2024 Jensen Precast- All rights reserved. All materials appearing as Jensen Precast documents and the like are proprietary work product and are protected under U.S. copyright and other laws.
Unless in conjunction with business conducted with Jensen Precast, any use of Jensen Precast work product without express, written consent is prohibited, and recipient is prohibited from distributing any and all work product to non-approved third parties under penalty of civil action.

DESCRIPTION:	CAS2-3660-AH5-TRX-G-CL-HI-HTC-OH07 36x60 Standard Cover Assembly (Loading Criteria Per ASTM C1802 Load Level 05, Steel, Hinged, Handle (1 Per Door), TraxPlate™, Galvanized, N/A, Hawaiian Telecom) 07			REV:	B-1-2
PART NUMBER:	200075392	DRAWN BY:	R. Dohr	SHEET:	1
CREATED:	5/2/2018	MODIFIED:	6/18/2024		

BILL OF MATERIALS

ITEM	ITEM QTY	QTY	PART NUMBER	DESCRIPTION	PART NAME
1		1	200075401	DAS2-B-3660-H5-TRX-R-BD	200075401
2	1	1	200075393	FAS-3660-AH-R-OH06	200075393
2		1	200075396	DAS2-T-3660-H5-TRX-R-CL	200075396
4	8	8	100026256	LOW-STRENGTH STEEL FLANGE NUT, 1/2" - 13 THREAD SIZE	100026256
5	6	6	100011418	WASHER FLAT 1/2 X 1 3/8 USS TYPE A ZINC	100011418
6	2	2	100011407	BOLT HEX 1/2-13 UNC 2.25 ZINC	100011407
7	8	8	100007939	CAP VINYL .467 X 1/2	100007939
8	2	2	100007924	LANYARD 3/64 W/PIN COATED SS	100007924
9	2	2	100007918	COTTER PIN 0.094DIA X 1-1/4	100007918
10	2	2	100007915	SPRING COMPRESSION 055 X 5/8 X 7/8 LONG	100007915
11	2	2	100007882	Rivet Blind Grip .1875" Large Domed Head Range-0.376-0.5" Steel	100007882
12	2	2	100007876	BOLT SHOULDER 3/8 X 1/2 WITH 3/8-16 UNC THREADS GR 5 PLATED	100007876
13	4	4	100007873	BOLT SHCS 3/8-16 X 1-1/4 PLATED	100007873
14	4	4	100007869	BOLT SHCS 1/2-13 X 1-3/4 SS	100007869
15	4	4	100007859	RIVET NUT 3/8-16 FLAT KNURLED	100007859
16	2	2	100007857	NUT FINGER 1/2-13 BRASS	100007857
17	2	2	100007729	HEX NUT SLOTTED CASTLE HEAD 1/2-13 SS	100007729
18	2	2	100007672	SPRING MOUNT ASSY .562	100007671
19	2	2	100007666	HINGE ASSY STL RIGHT	100007666
20	2	2	100007661	HINGE ASSY STL LEFT .562	100007659
21	1	1	100007492	HEX NUT NYLOCK - 1/2-13 UNC - GR5 - ZINC	100007492
22	4	4	100005059	BOLT HEX 1/2-13 UNC 2.5 ZINC	100005059
23	4	4	100003823	BOLT HEX 1/2-13 UNC 1.5 ZINC	100003823
24	1	1	100006739	FONTANA NAME PLATE SS BLANK	100006739
25	2	2	100007862	HEX NUT NYLOCK - 5/16-18 UNC - 304SS	100007862
26	2	2	100007875	BOLT SHOULDER SOCKET FLAT COUNTERSUNK HEAD - 5/16-18 UNC - 1.00 - 304SS	100007875
27	2	2	100002652	WASHER FLAT 5/16 REGULAR TYPE A 316SS	100002652
28	2	2	100007933	SAFETY LATCH ASSY FOR UNI AND 90 D HINGE	100007933
29	2	2	100007896	TORSION HEX ROD 9/16 X 36 RAW	100007896

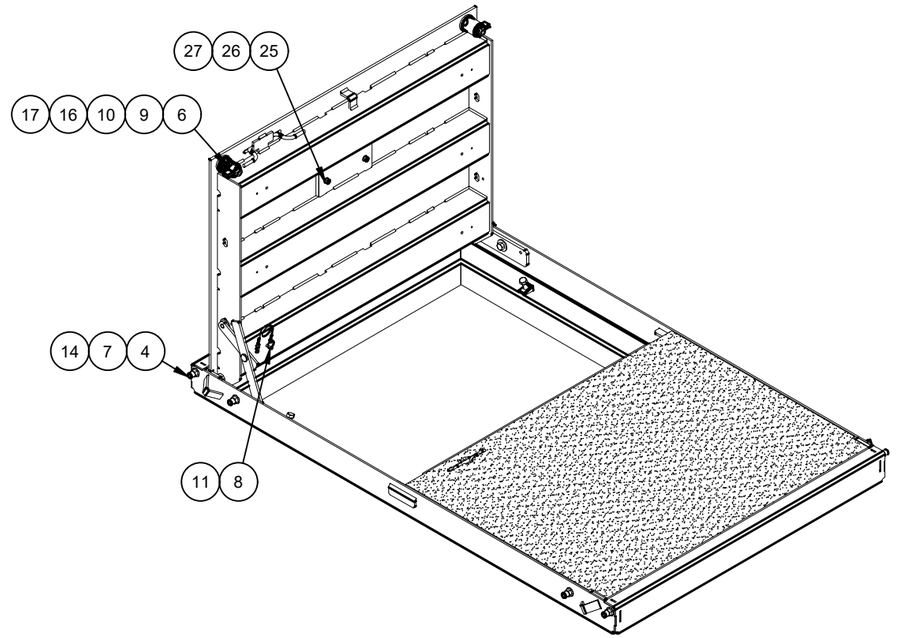

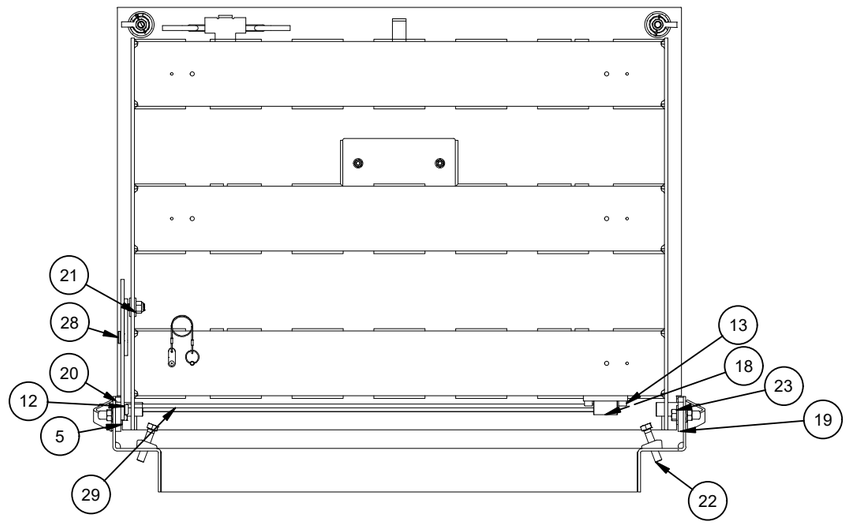

REVISION HISTORY	
DESCRIPTION	DATE
NEW BOM, NEW NEST, NEW TOP PLATE CUTOUT DIMENSION FOR CLEARANCE WITH TRAX	1/4/2024
(ECR 56751-2 REPLACED 100007727, 100007671, AND 100007659 WITH 100007896, 100007672, AND 100007659, RESPECTIVELY.) REPLACED LAP BAR AND HANDLE RETAINER PLATE, ADJUSTED HANDLE POSITIONS, ADDED WELD BEADS/INDICATORS, ADJUSTED HINGE HOLE DIAMETER IN FRAME SIDE TO 0.5625".	6/3/2024
UPDATED PROPERTIES TO REFLECT LOAD LEVEL 5 DESIGN	6/18/24

MATERIAL FINISH: Galvanized

MATERIAL SURFACE: TraxPlate™

JENSEN METALTECH

450 E. GLENDALE AVE. SPARKS. NV 89431
775-352-2716 FAX: 755-358-8127
JENSENMETALTECH.COM

©2024 Jensen Precast- All rights reserved. All materials appearing as Jensen Precast documents and the like are proprietary work product and are protected under U.S. copyright and other laws. Unless in conjunction with business conducted with Jensen Precast, any use of Jensen Precast work product without express, written consent is prohibited, and recipient is prohibited from distributing any and all work product to non-approved third parties under penalty of civil action.

PART NUMBER & DESCRIPTION: 200075392 CAS2-3660-AH5-TRX-G-CL-HI-HTC-OH07

REV: B-1-2

WEIGHT: 533.29 Lbs

DRAWN BY: R. Dohr

CREATED: 5/2/2018

MODIFIED: 6/18/2024

SHEET: 2

200075392.idw

BURN LIST - BOM

PART NAME	ITEM QTY	QTY	DESCRIPTION	STOCK NUMBER	MATERIAL	MASS	SHEET
200075394	2	66.854 lbmass	Frame Component Steel Frame Side, Adjustable	100007734	STL ASTM A36 SM-HRPO 60X120 RAW .1875	33.427 lbmass	07
200075395	2	48.001 lbmass	Frame Component Steel Frame End, Adjustable	100007734	STL ASTM A36 SM-HRPO 60X120 RAW .1875	24.000 lbmass	08
200075397	4	26.730 lbmass	Door Component Steel Side Bar	100007735	STL ASTM A36 SM-HRPO RAW .250	6.683 lbmass	09
200075398	1	110.497 lbmass	Door Component Steel Plate, Top	100007835	STL ASTM A36 SM-HRPO RAW .3125	110.497 lbmass	10
200075399	6	130.382 lbmass	Door Component Steel Channel	100007821	SHT STL GR80 SM-HRPO RAW .1875	21.730 lbmass	11
200075402	1	113.104 lbmass	Door Component Steel Plate, Bottom	100007835	STL ASTM A36 SM-HRPO RAW .3125	113.104 lbmass	12
200084611	1	2.067 lbmass	NAME PLATE BACKING PLATE	100007735	STL ASTM A36 SM-HRPO RAW .250	2.067 lbmass	13
200087246	1	4.822 lbmass	Door Component Steel Lap Bar 36in, 2.5" Stiffener Offset	100007735	STL ASTM A36 SM-HRPO RAW .250	4.822 lbmass	14

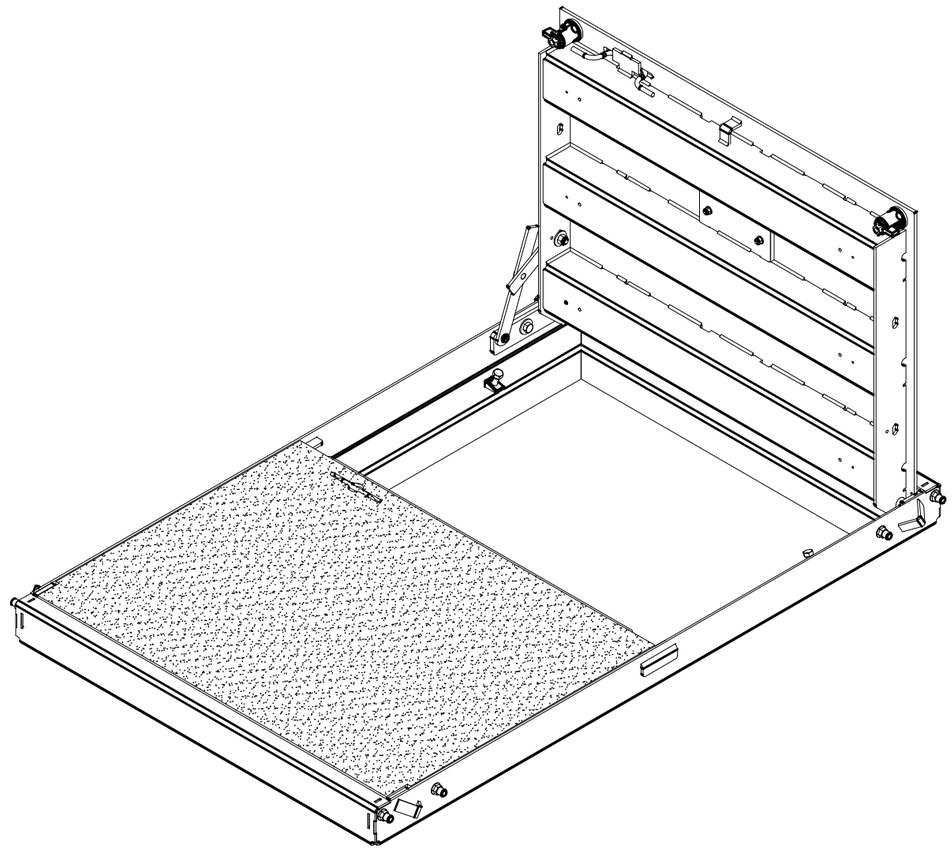

200075392.idw

MATERIAL FINISH: Galvanized

MATERIAL SURFACE: TraxPlate™

JENSEN METALTECH
450 E. GLENDALE AVE. SPARKS. NV 89431
775-352-2716 FAX: 755-358-8127
JENSENMETALTECH.COM

©2024 Jensen Precast- All rights reserved.
All materials appearing as Jensen Precast documents and the like are proprietary work product and are protected under U.S. copyright and other laws.
Unless in conjunction with business conducted with Jensen Precast, any use of Jensen Precast work product without express, written consent is prohibited, and recipient is prohibited from distributing any and all work product to non-approved third parties under penalty of civil action.

PART NUMBER & DESCRIPTION: 200075392 CAS2-3660-AH5-TRX-G-CL-HI-HTC-OH07

REV: B-1-2

WEIGHT: 533.29 Lbs

DRAWN BY: R. Dohr

SHEET: 3

CREATED: 5/2/2018

MODIFIED: 6/18/2024

BILL OF MATERIALS

ITEM	ITEM QTY	QTY	PART NUMBER	DESCRIPTION	PART NAME
1	1	110.498 lbmass	100007835	Door Component Steel Plate, Top	200075398
2	2	13.365 lbmass	100007735	Door Component Steel Side Bar	200075397
3	3	65.077 lbmass	100007821	Door Component Steel Channel	200075399
4	1	2.067 lbmass	100007735	NAME PLATE BACKING PLATE	200084611
5	1	1	100007644	LEAF PULL HANDLE A36 3/8IN DIAMETER	100007644
6	1	1	100007647	LIFTING BRACKET STEEL LEAF	100007647
7	1	1	100007646	HANDLE RETAINER STL	100007646
8	2	2	100007970	CAM TOWER CAST STEEL	100007970

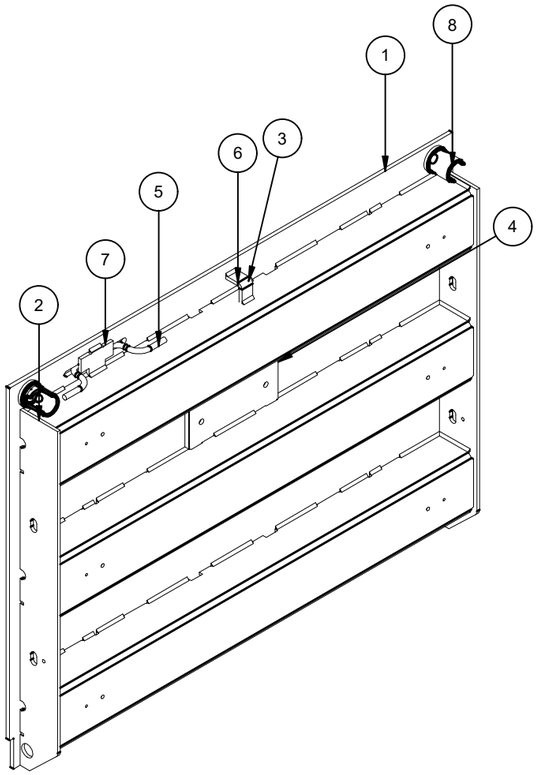

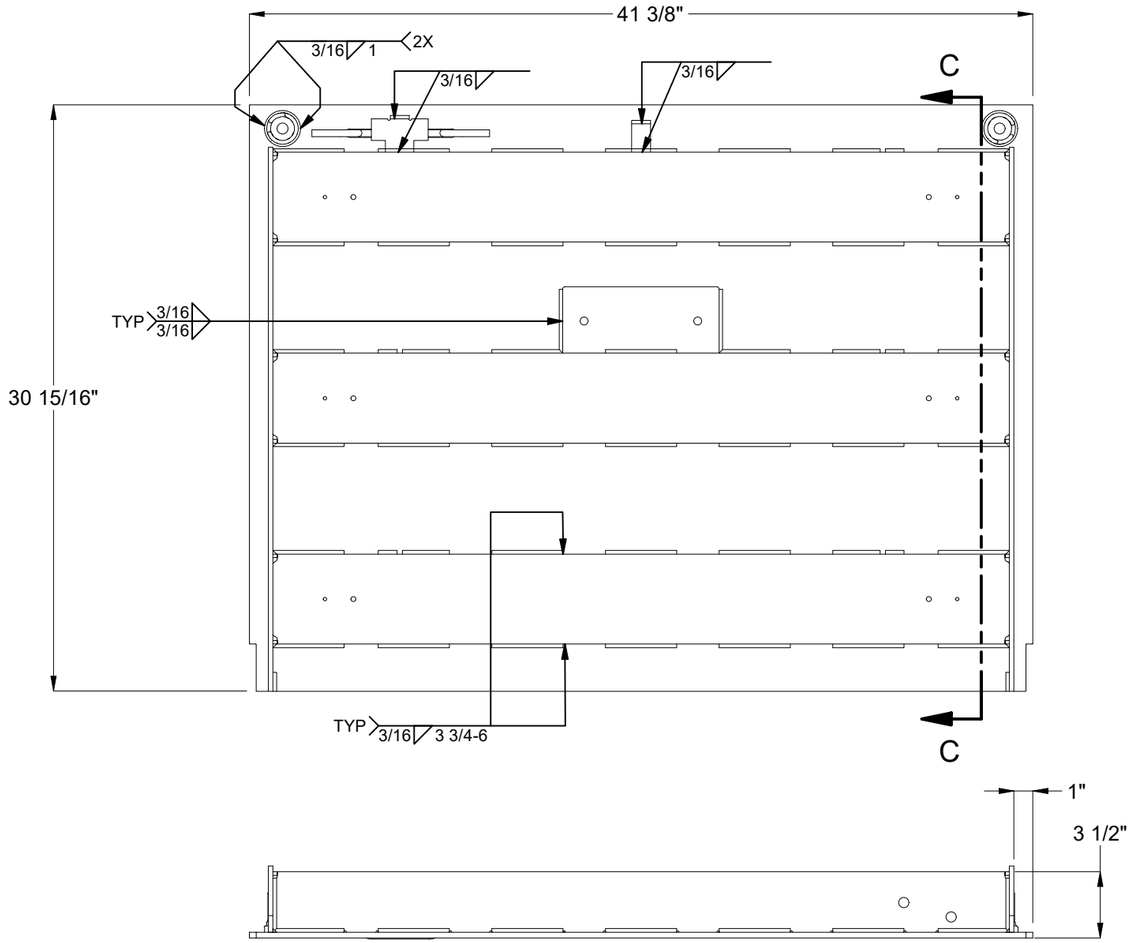

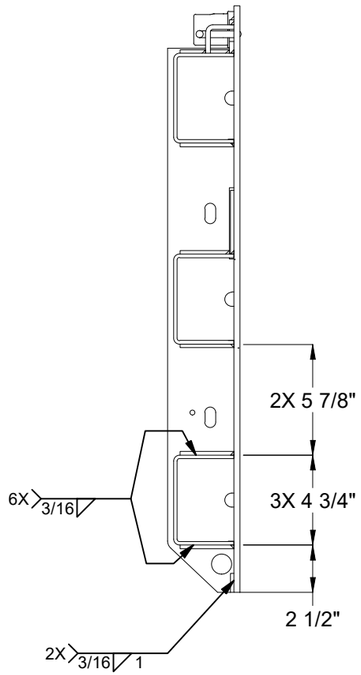

SECTION C-C

MATERIAL FINISH: Raw	JENSEN METALTECH 450 E. GLENDALE AVE. SPARKS. NV 89431 775-352-2716 FAX: 755-358-8127 *JENSENMETALTECH.COM*	©2024 Jensen Precast- All rights reserved. All materials appearing as Jensen Precast documents and the like are proprietary work product and are protected under U.S. copyright and other laws. Unless in conjunction with business conducted with Jensen Precast, any use of Jensen Precast work product without express, written consent is prohibited, and recipient is prohibited from distributing any and all work product to non-approved third parties under penalty of civil action.	PART NUMBER & DESCRIPTION: 200075396 DAS2-T-3660-H5-TRX-R-CL	REV: B-1-2
MATERIAL SURFACE: TraxPlate™			WEIGHT: 193.89 Lbs CREATED: 5/2/2018	DRAWN BY: R. Dohr MODIFIED: 6/18/2024	SHEET: 4

200075392.idw

BILL OF MATERIALS

ITEM	ITEM QTY	QTY	PART NUMBER	DESCRIPTION	PART NAME
1	1	113.104 lbmass	100007835	Door Component Steel Plate, Bottom	200075402
2	2	13.365 lbmass	100007735	Door Component Steel Side Bar	200075397
3	3	65.191 lbmass	100007821	Door Component Steel Channel	200075399
4	1	4.822 lbmass	100007735	Door Component Steel Lap Bar 36in, 2.5" Stiffener Offset	200087246
5	1	1	100007644	LEAF PULL HANDLE A36 3/8IN DIAMETER	100007644
6	1	1	100007647	LIFTING BRACKET STEEL LEAF	100007647

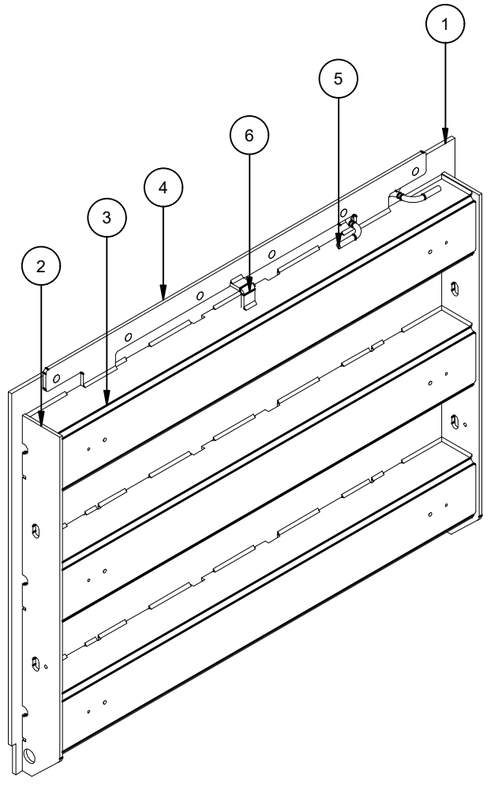

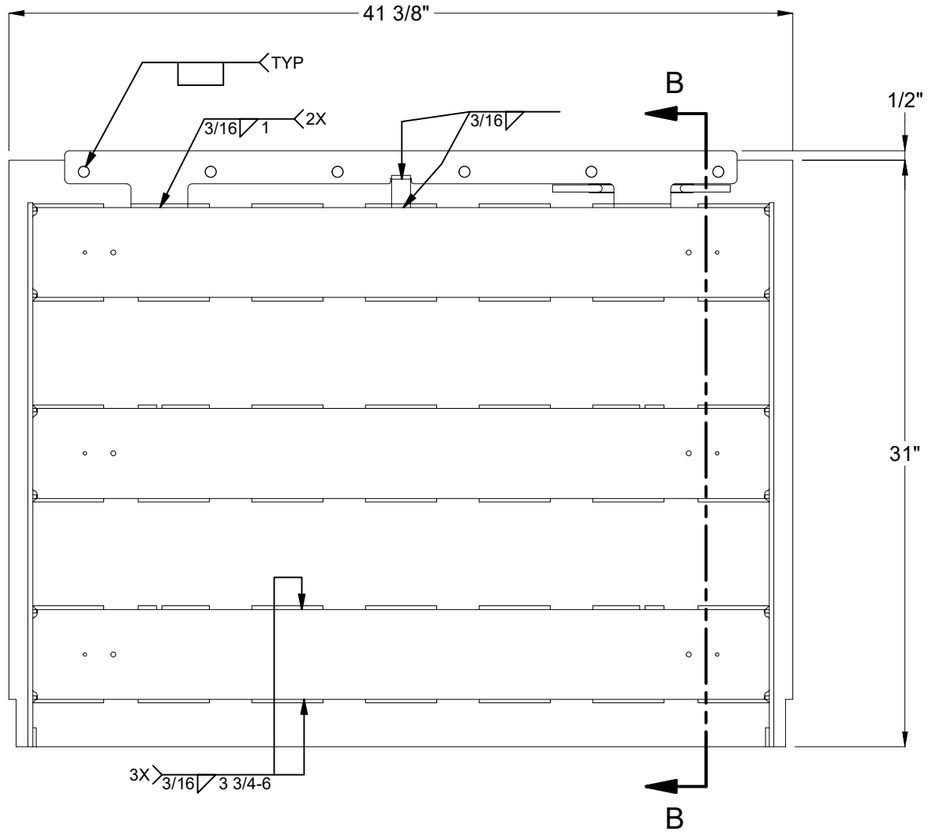

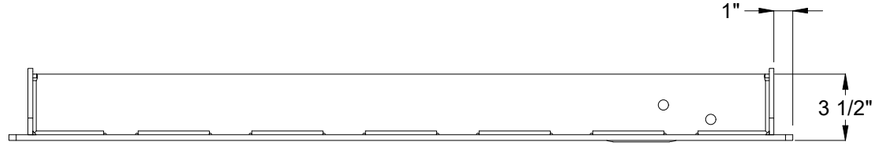

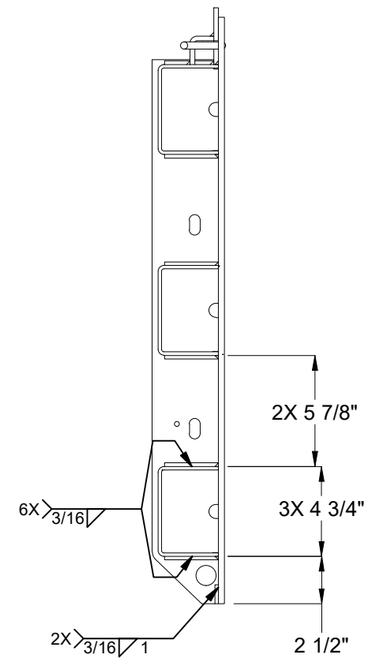

SECTION B-B

200075392.idw

MATERIAL FINISH: Raw	JENSEN METALTECH 450 E. GLENDALE AVE. SPARKS. NV 89431 775-352-2716 FAX: 755-358-8127 *JENSENMETALTECH.COM*	©2024 Jensen Precast- All rights reserved. All materials appearing as Jensen Precast documents and the like are proprietary work product and are protected under U.S. copyright and other laws. Unless in conjunction with business conducted with Jensen Precast, any use of Jensen Precast work product without express, written consent is prohibited, and recipient is prohibited from distributing any and all work product to non-approved third parties under penalty of civil action.	PART NUMBER & DESCRIPTION: 200075401 DAS2-B-3660-H5-TRX-R-BD / REV: B-1-2
MATERIAL SURFACE: TraxPlate™			WEIGHT: 197.79 Lbs / DRAWN BY: R. Dohr / SHEET: 5
			CREATED: 5/2/2018 / MODIFIED: 6/18/2024

BILL OF MATERIALS

ITEM	ITEM QTY	QTY	PART NUMBER	DESCRIPTION	PART NAME
1	2	66.835 lbmass	100007734	Frame Component Steel Frame Side, Adjustable	200075394
2	2	48.001 lbmass	100007734	Frame Component Steel Frame End, Adjustable	200075395
3	4	4	200018691	FRAME BOLT DOUBLER SLOT	200018691
4	2	2	100007636	FRAME LATCH ANGLE - A36 - 4IN LONG	100007636
5	4	4	100007641	FRAME LIFTING BRACKET	100007641
6	4	4	100007863	NUT LEVELER 1/2-13 WELDABLE CAST STEEL	100007863

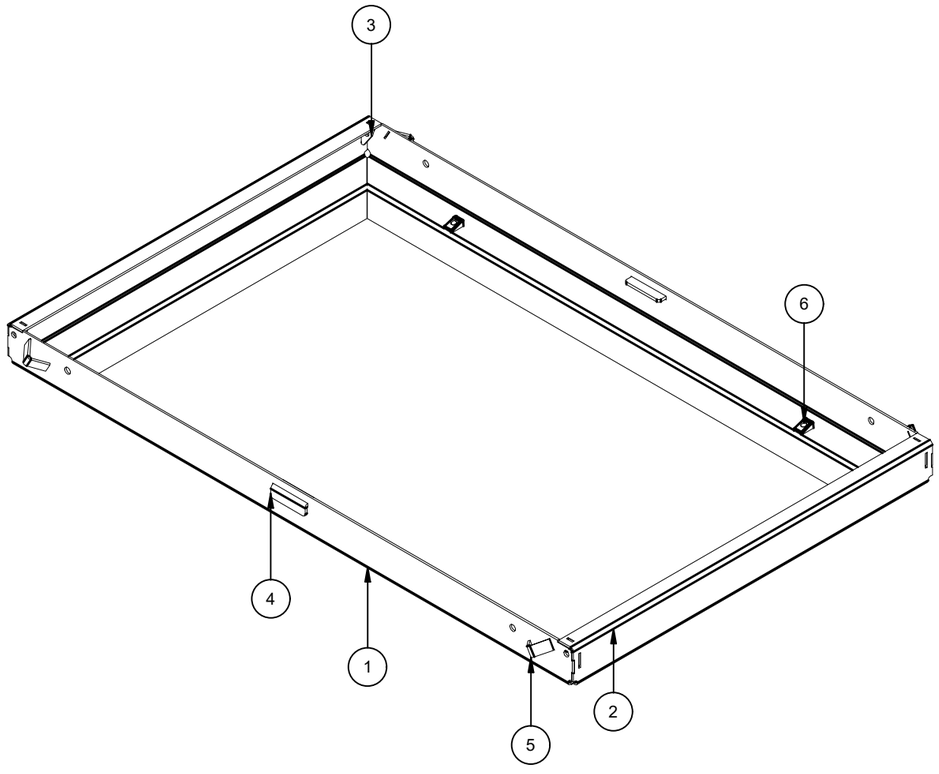

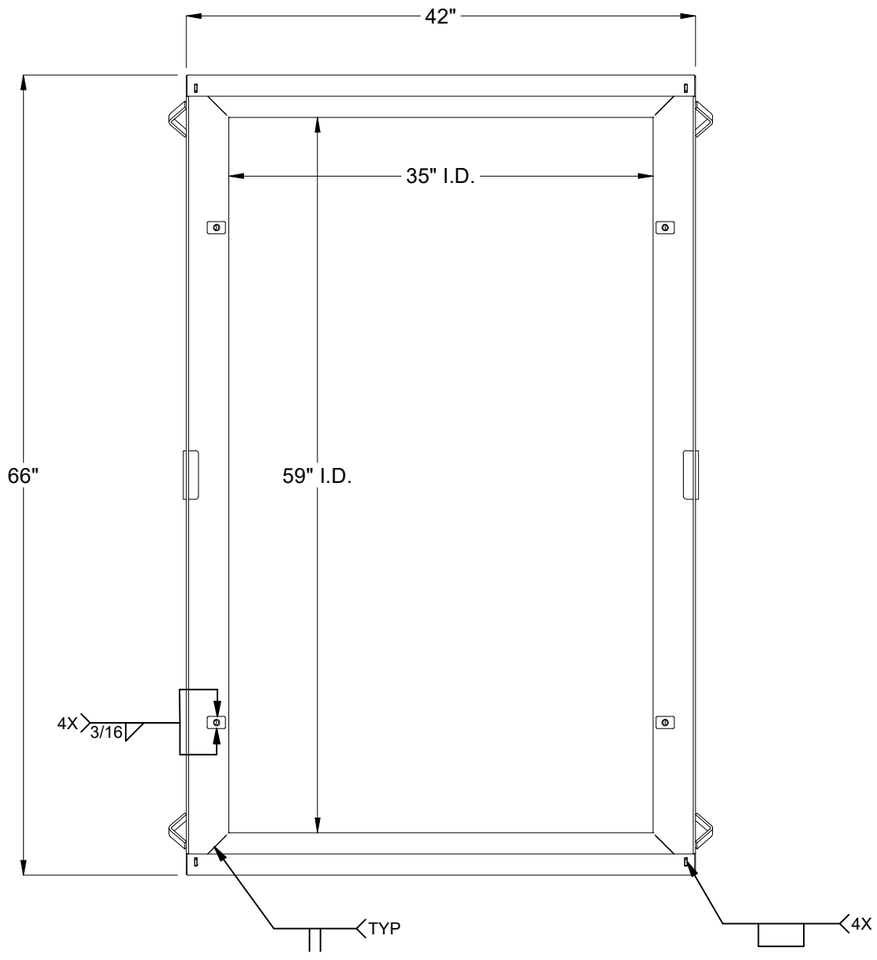

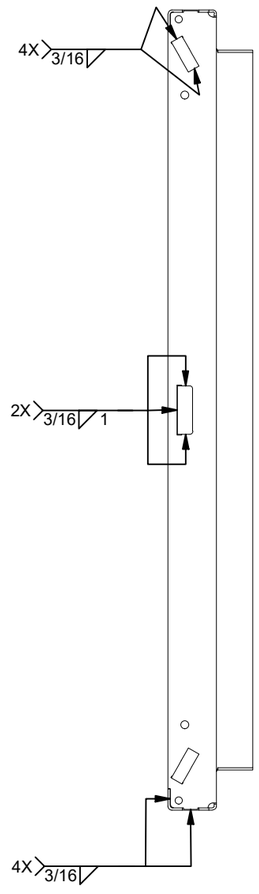

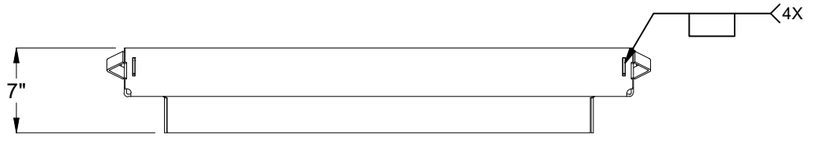

200075392.idw

MATERIAL FINISH: Raw	JENSEN METALTECH 450 E. GLENDALE AVE. SPARKS. NV 89431 775-352-2716 FAX: 755-358-8127 *JENSENMETALTECH.COM*	©2024 Jensen Precast- All rights reserved. All materials appearing as Jensen Precast documents and the like are proprietary work product and are protected under U.S. copyright and other laws. Unless in conjunction with business conducted with Jensen Precast, any use of Jensen Precast work product without express, written consent is prohibited, and recipient is prohibited from distributing any and all work product to non-approved third parties under penalty of civil action.	PART NUMBER & DESCRIPTION: 200075393 FAS-3660-AH-R-OH06	REV: B-1-2
MATERIAL SURFACE: Smooth			WEIGHT: 117.96 Lbs CREATED: 5/2/2018	DRAWN BY: R. Dohr MODIFIED: 6/18/2024	SHEET: 6

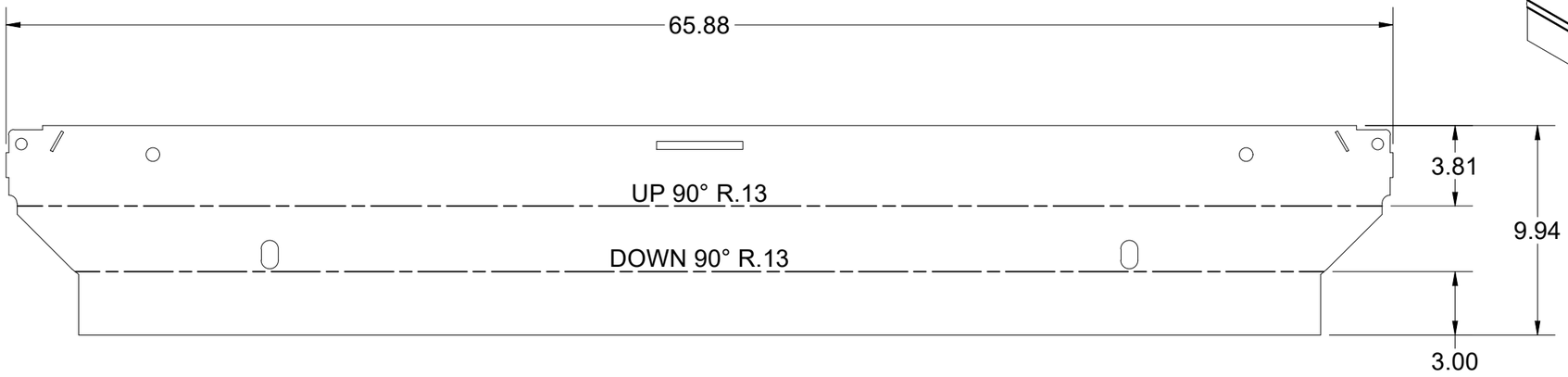

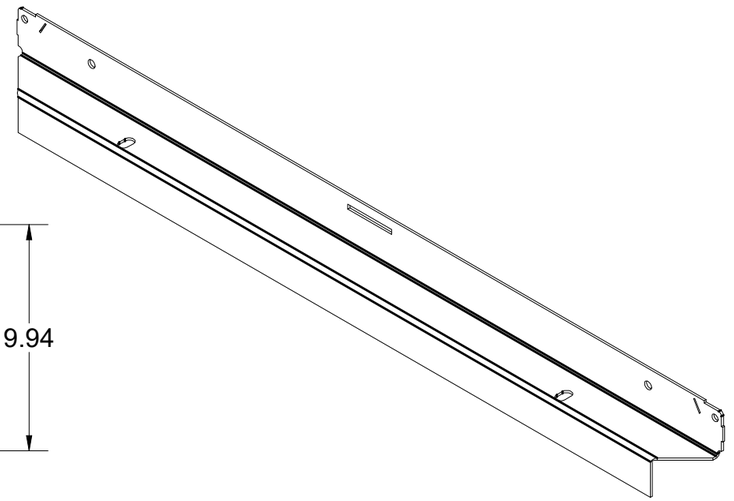

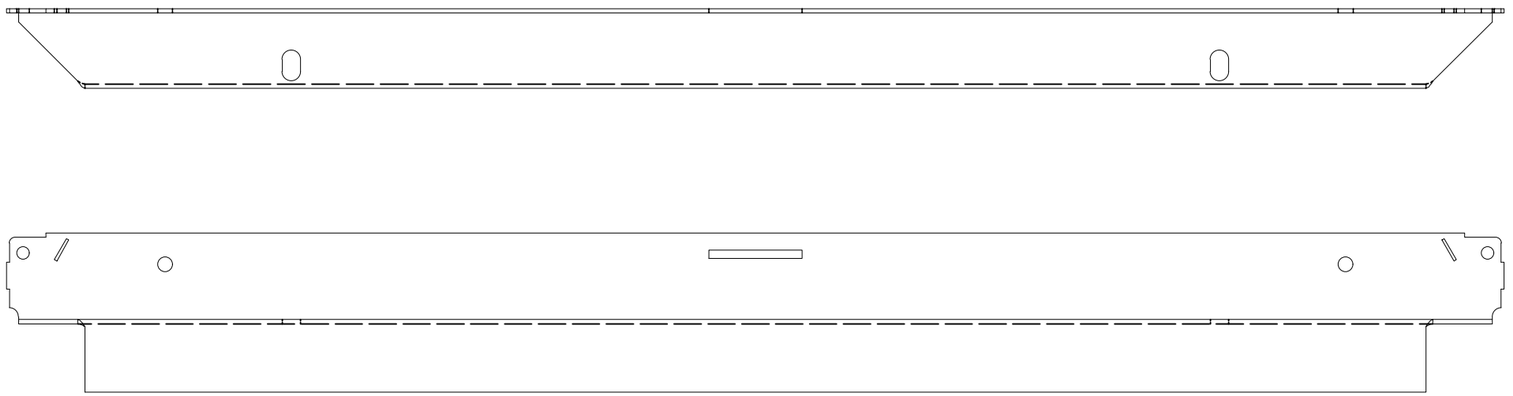

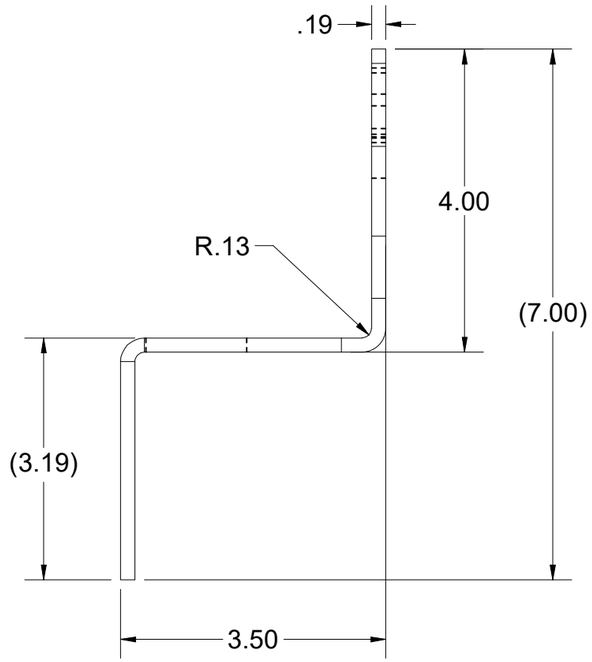

BEND TABLE			
BEND RADIUS	V-OPENING	BEND ANGLE	BEND DEDUCTION
0.125	2	90	0.3750

MATERIAL IFS: 100007734

MATERIAL THK: 0.1875

MAT DESCRIPTION: STL ASTM A36 SM-HRPO 60X120 RAW .1875

JENSEN METALTECH
450 E. GLENDALE AVE. SPARKS. NV 89431
775-352-2716 FAX: 755-358-8127
JENSENMETALTECH.COM

©2024 Jensen Precast- All rights reserved. All materials appearing as Jensen Precast documents and the like are proprietary work product and are protected under U.S. copyright and other laws. Unless in conjunction with business conducted with Jensen Precast, any use of Jensen Precast work product without express, written consent is prohibited, and recipient is prohibited from distributing any and all work product to non-approved third parties under penalty of civil action.

NAME & DESCRIPTION: 200075394 Frame Component Steel Frame Side, Adjustable

REV: B-1-2

WEIGHT: 33.427 lbmass

DRAWN BY: R. Dohr

CREATED: 5/2/2018

MODIFIED: 6/18/2024

SHEET: 7 OF 14

200075392.idw

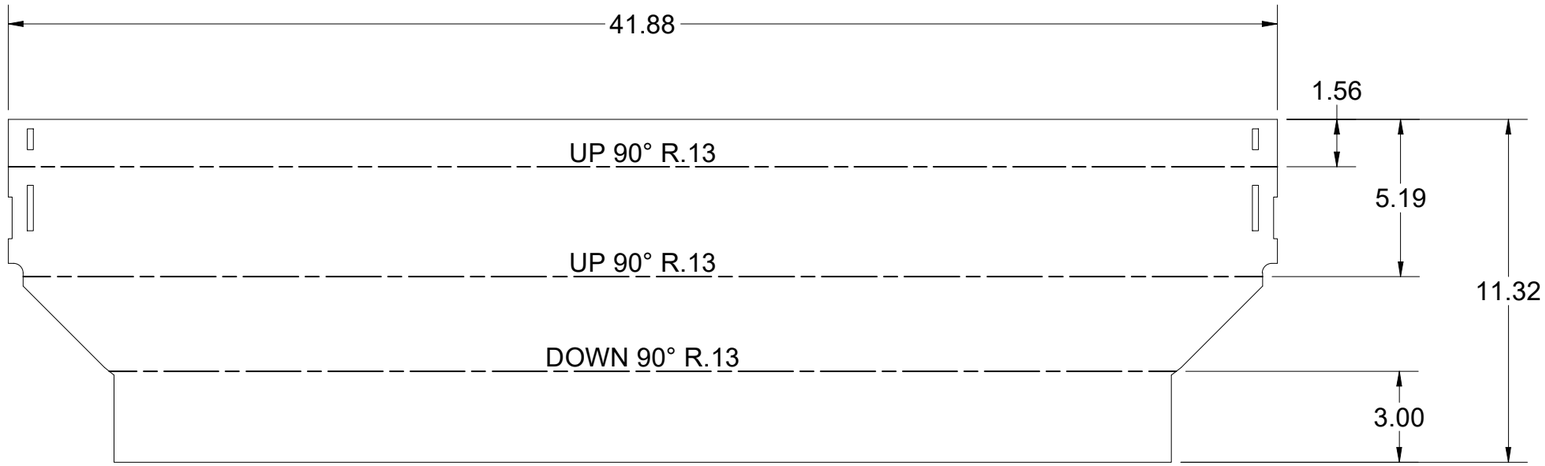

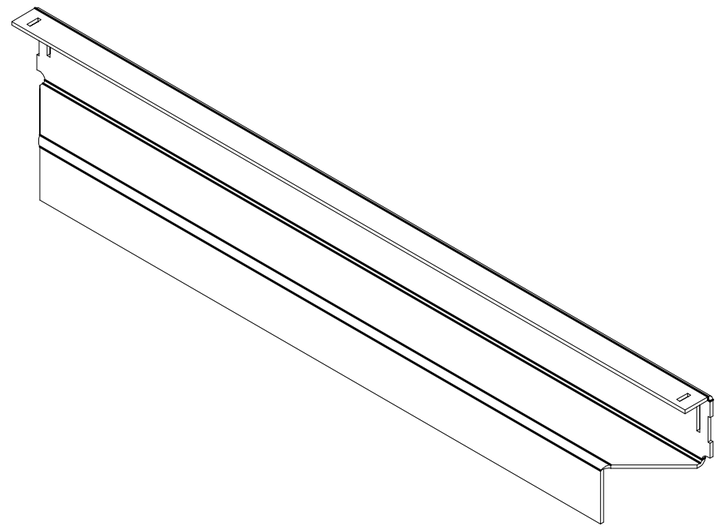

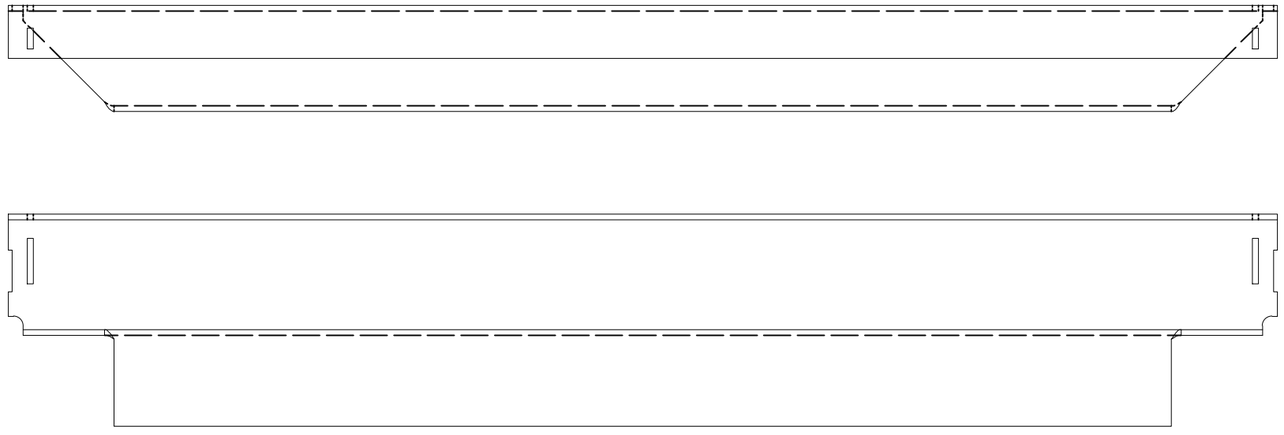

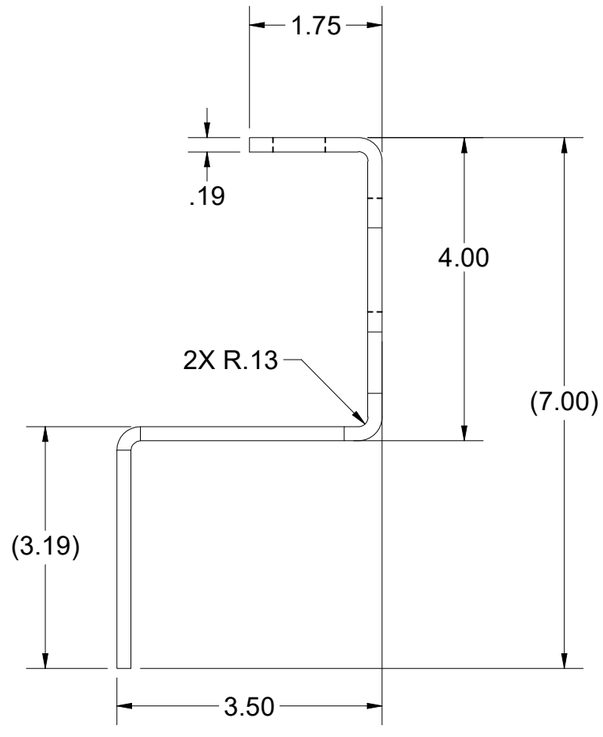

BEND TABLE			
BEND RADIUS	V-OPENING	BEND ANGLE	BEND DEDUCTION
0.125	2	90	0.3750

MATERIAL IFS: 100007734

MATERIAL THK: 0.1875

MAT DESCRIPTION: STL ASTM A36 SM-HRPO 60X120 RAW .1875

JENSEN METALTECH
450 E. GLENDALE AVE. SPARKS. NV 89431
775-352-2716 FAX: 755-358-8127
JENSENMETALTECH.COM

©2024 Jensen Precast- All rights reserved. All materials appearing as Jensen Precast documents and the like are proprietary work product and are protected under U.S. copyright and other laws. Unless in conjunction with business conducted with Jensen Precast, any use of Jensen Precast work product without express, written consent is prohibited, and recipient is prohibited from distributing any and all work product to non-approved third parties under penalty of civil action.

NAME & DESCRIPTION: 200075395 Frame Component Steel Frame End, Adjustable

REV: B-1-2

WEIGHT: 24.000 lbmass

DRAWN BY: R. Dohr

CREATED: 5/2/2018

MODIFIED: 6/18/2024

SHEET: 8 OF 14

200075392.idw

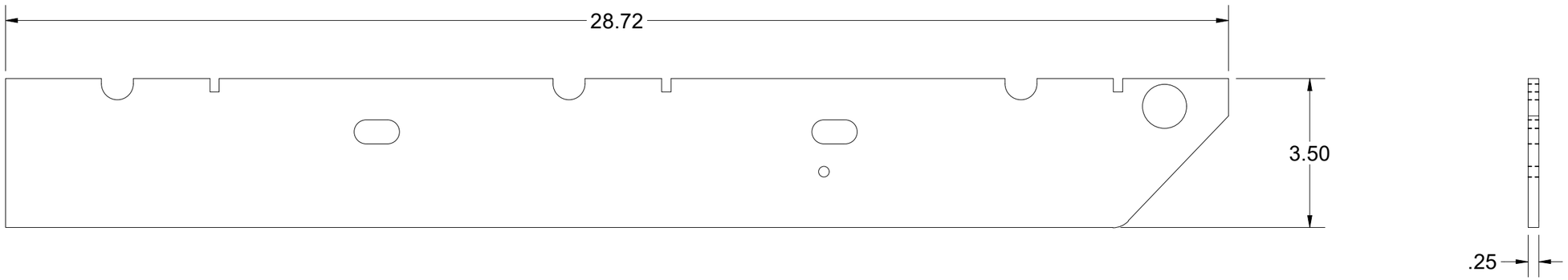

200075392.idw

BEND TABLE				MATERIAL IFS: 100007735
BEND RADIUS	V-OPENING	BEND ANGLE	BEND DEDUCTION	MATERIAL THK: 0.25
-	-	-	-	MAT DESCRIPTION: STL ASTM A36 SM-HRPO RAW .250

JENSEN METALTECH
450 E. GLENDALE AVE. SPARKS. NV 89431
775-352-2716 FAX: 755-358-8127
JENSENMETALTECH.COM

©2024 Jensen Precast- All rights reserved.
All materials appearing as Jensen Precast documents and the like are proprietary work product and are protected under U.S. copyright and other laws.
Unless in conjunction with business conducted with Jensen Precast, any use of Jensen Precast work product without express, written consent is prohibited, and recipient is prohibited from distributing any and all work product to non-approved third parties under penalty of civil action.

NAME & DESCRIPTION:	200075397 Door Component Steel Side Bar		REV: B-1-2
WEIGHT: 6.683 lbmass		DRAWN BY: R. Dohr	SHEET: 9 OF 14
CREATED: 5/2/2018		MODIFIED: 6/18/2024	

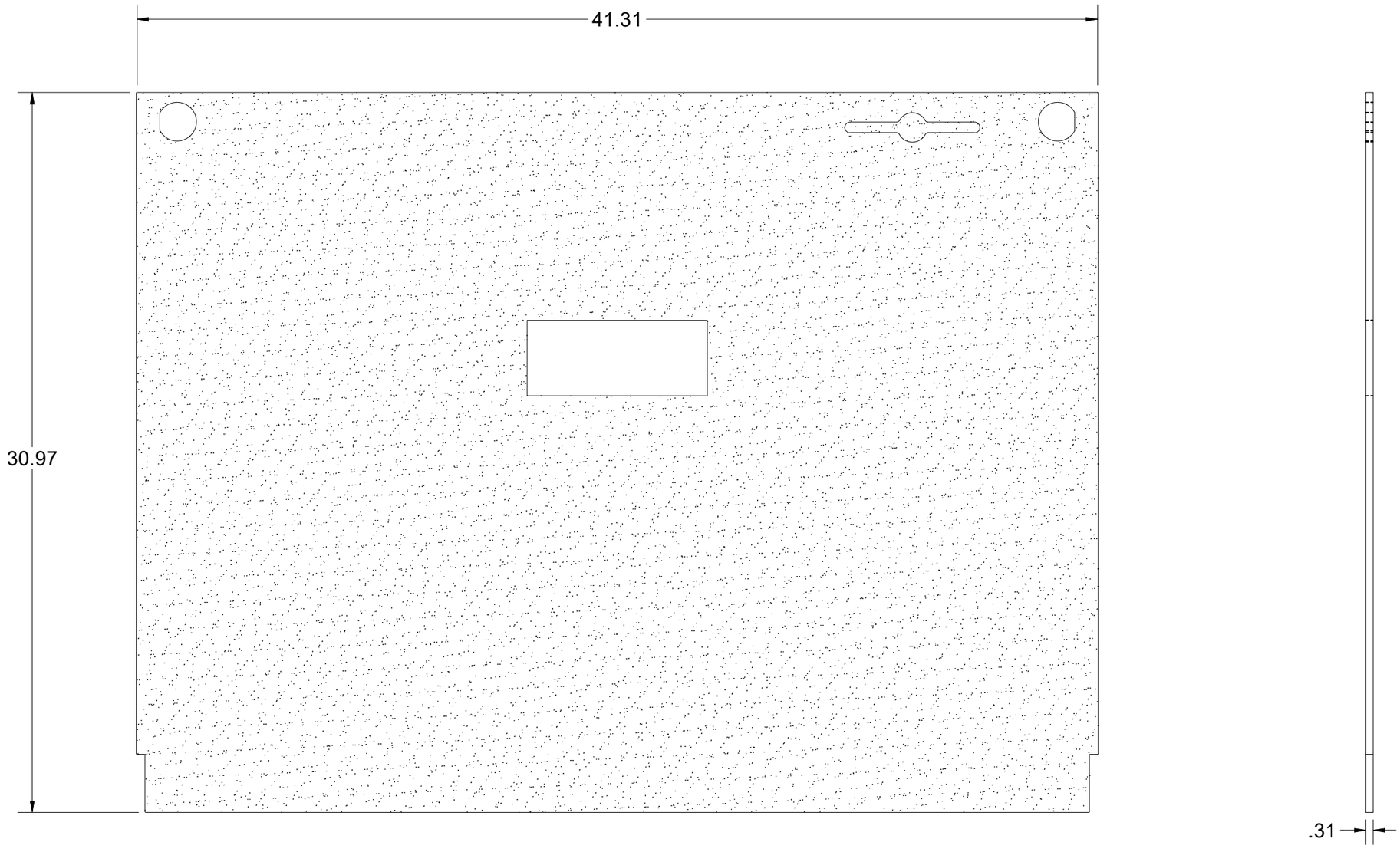

200075392.idw

BEND TABLE				MATERIAL IFS: 100007835			
BEND RADIUS	V-OPENING	BEND ANGLE	BEND DEDUCTION	MATERIAL THK: 0.3125			
-	-	-	-	MAT DESCRIPTION: STL ASTM A36 SM-HRPO RAW .3125			

JENSEN METALTECH
450 E. GLENDALE AVE. SPARKS. NV 89431
775-352-2716 FAX: 755-358-8127
JENSENMETALTECH.COM

©2024 Jensen Precast- All rights reserved. All materials appearing as Jensen Precast documents and the like are proprietary work product and are protected under U.S. copyright and other laws. Unless in conjunction with business conducted with Jensen Precast, any use of Jensen Precast work product without express, written consent is prohibited, and recipient is prohibited from distributing any and all work product to non-approved third parties under penalty of civil action.

NAME & DESCRIPTION:	200075398 Door Component Steel Plate, Top		REV: B-1-2
WEIGHT: 110.497 lbmass	DRAWN BY: R. Dohr		SHEET: 10 OF 14
CREATED: 5/2/2018	MODIFIED: 6/18/2024		

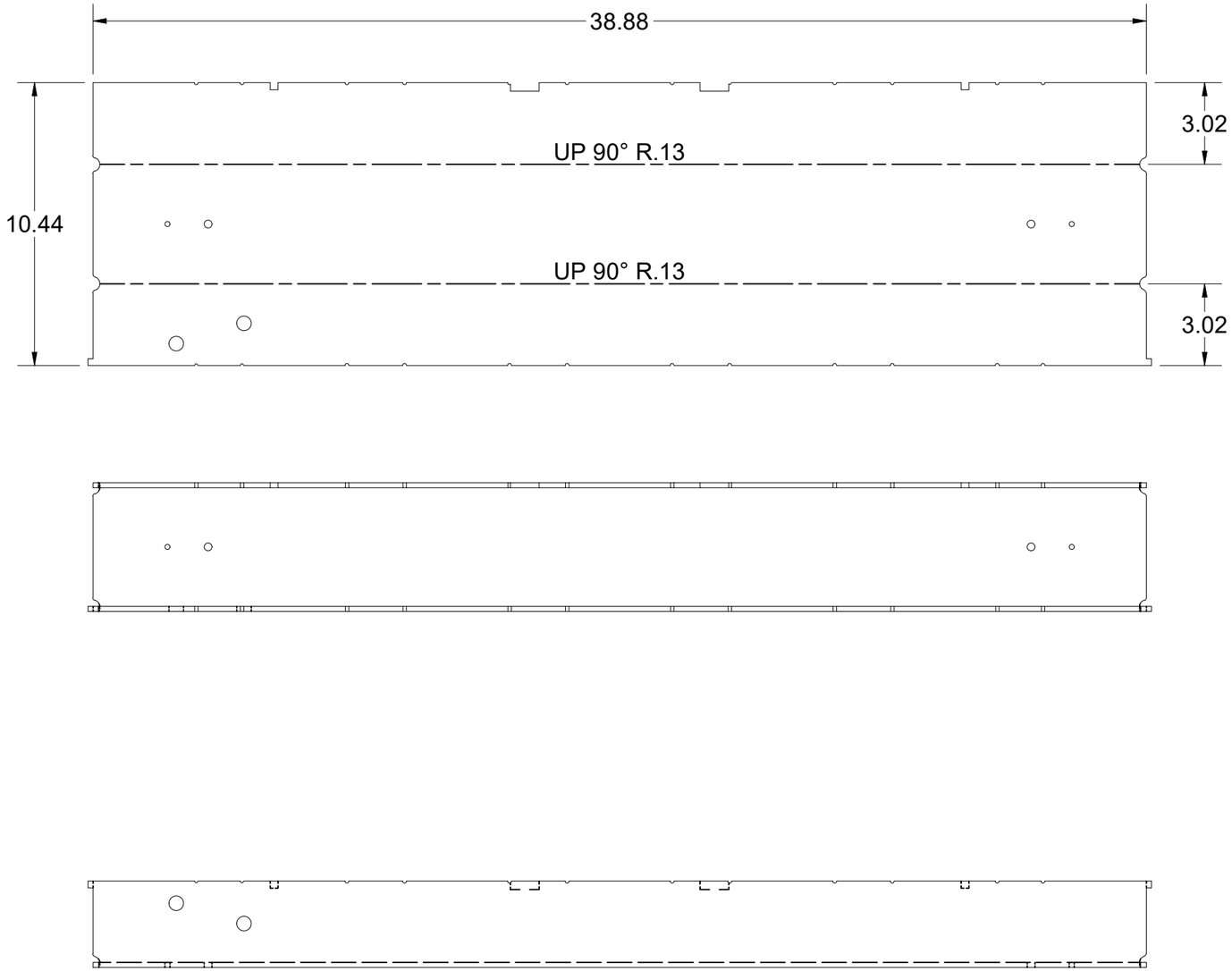

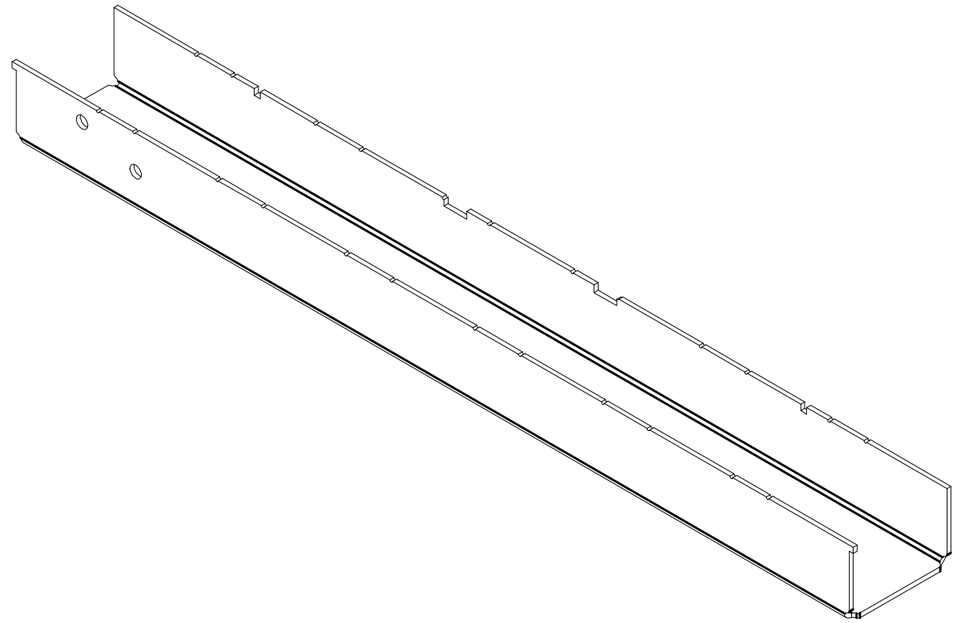

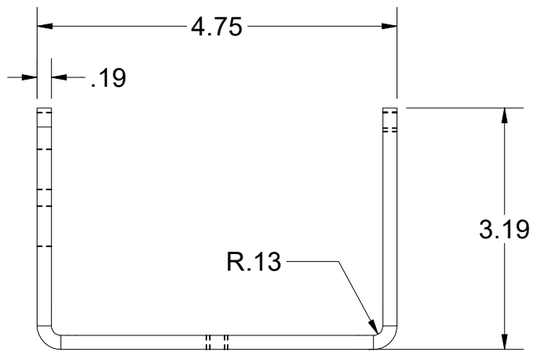

BEND TABLE				MATERIAL IFS: 100007821
BEND RADIUS	V-OPENING	BEND ANGLE	BEND DEDUCTION	MATERIAL THK: 0.1875
0.125	2	90	0.3450	MAT DESCRIPTION: SHT STL GR80 SM-HRPO RAW .1875

JENSEN METALTECH
450 E. GLENDALE AVE. SPARKS. NV 89431
775-352-2716 FAX: 755-358-8127
JENSENMETALTECH.COM

©2024 Jensen Precast- All rights reserved.
All materials appearing as Jensen Precast documents and the like are proprietary work product and are protected under U.S. copyright and other laws.
Unless in conjunction with business conducted with Jensen Precast, any use of Jensen Precast work product without express, written consent is prohibited, and recipient is prohibited from distributing any and all work product to non-approved third parties under penalty of civil action.

NAME & DESCRIPTION: 200075399 Door Component Steel Channel		REV: B-1-2
WEIGHT: 21.730 lbmass	DRAWN BY: R. Dohr	SHEET: 11 OF 14
CREATED: 5/2/2018	MODIFIED: 6/18/2024	

200075392.idw

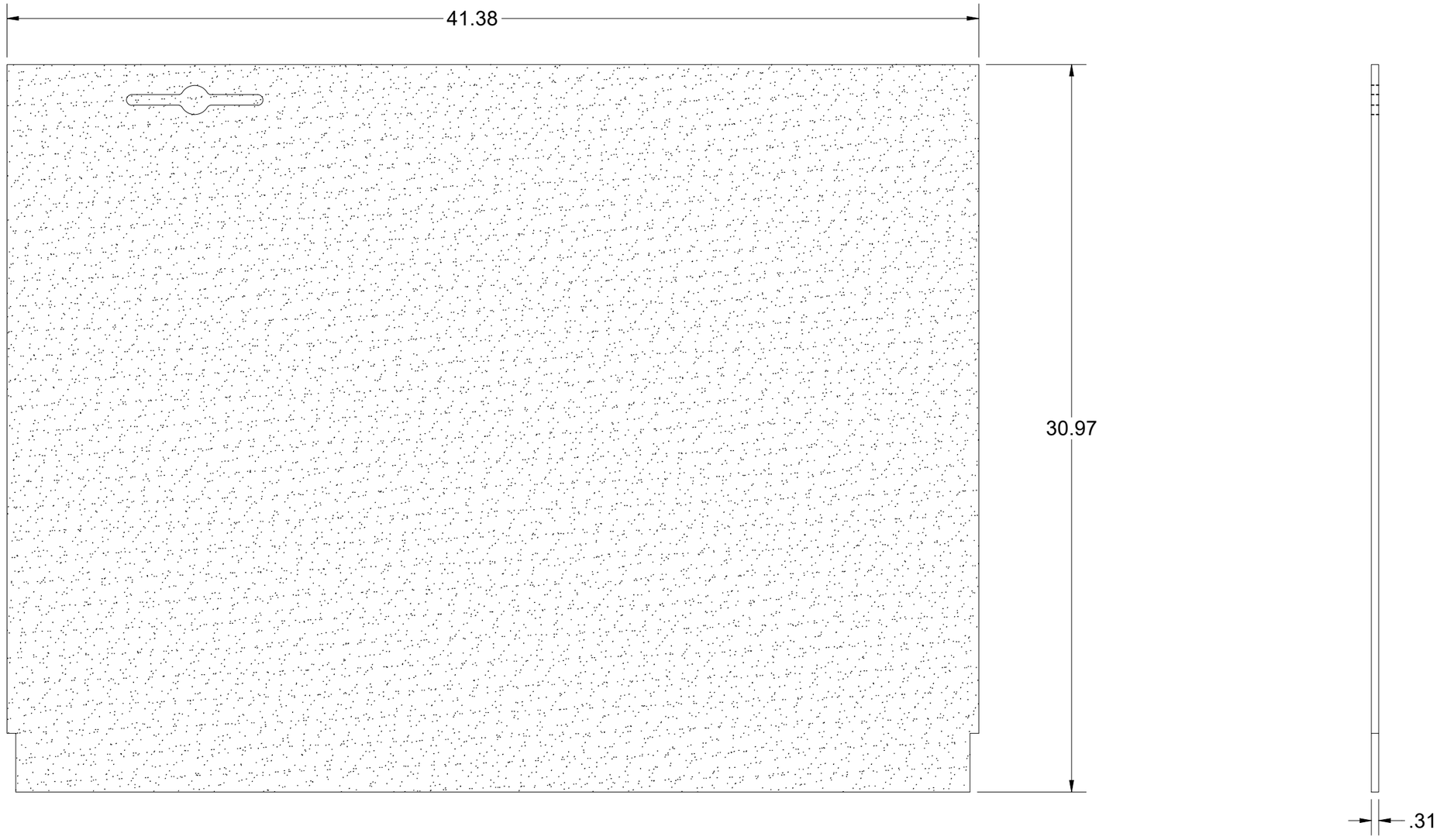

200075392.idw

BEND TABLE				MATERIAL IFS: 100007835	JENSEN METALTECH 450 E. GLENDALE AVE. SPARKS. NV 89431 775-352-2716 FAX: 755-358-8127 *JENSENMETALTECH.COM*	©2024 Jensen Precast- All rights reserved. All materials appearing as Jensen Precast documents and the like are proprietary work product and are protected under U.S. copyright and other laws. Unless in conjunction with business conducted with Jensen Precast, any use of Jensen Precast work product without express, written consent is prohibited, and recipient is prohibited from distributing any and all work product to non-approved third parties under penalty of civil action.	NAME & DESCRIPTION: 200075402 Door Component Steel Plate, Bottom		REV: B-1-2
BEND RADIUS	V-OPENING	BEND ANGLE	BEND DEDUCTION	MATERIAL THK: 0.3125					
-	-	-	-	MAT DESCRIPTION: STL ASTM A36 SM-HRPO RAW .3125			WEIGHT: 113.104 lbmass	DRAWN BY: R. Dohr	SHEET: 12 OF 14
							CREATED: 5/2/2018	MODIFIED: 6/18/2024	

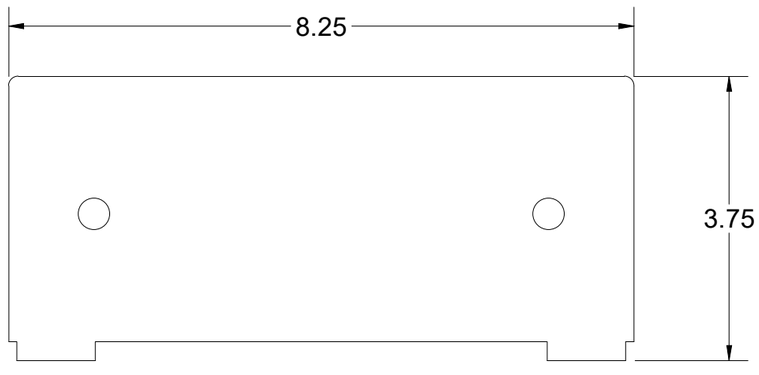

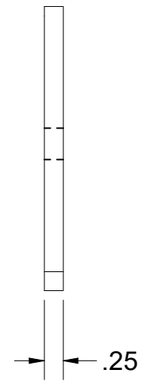

200075392.idw

BEND TABLE				MATERIAL IFS: 100007735	JENSEN METALTECH 450 E. GLENDALE AVE. SPARKS. NV 89431 775-352-2716 FAX: 755-358-8127 *JENSENMETALTECH.COM*	©2024 Jensen Precast- All rights reserved. All materials appearing as Jensen Precast documents and the like are proprietary work product and are protected under U.S. copyright and other laws. Unless in conjunction with business conducted with Jensen Precast, any use of Jensen Precast work product without express, written consent is prohibited, and recipient is prohibited from distributing any and all work product to non-approved third parties under penalty of civil action.	NAME & DESCRIPTION: 200084611 NAME PLATE BACKING PLATE		REV: B-1-2
BEND RADIUS	V-OPENING	BEND ANGLE	BEND DEDUCTION	MATERIAL THK: 0.25					
-	-	-	-	MAT DESCRIPTION: STL ASTM A36 SM-HRPO RAW .250			WEIGHT: 2.067 lbmass	DRAWN BY: R. Dohr	SHEET: 13 OF 14
							CREATED: 5/2/2018	MODIFIED: 6/18/2024	

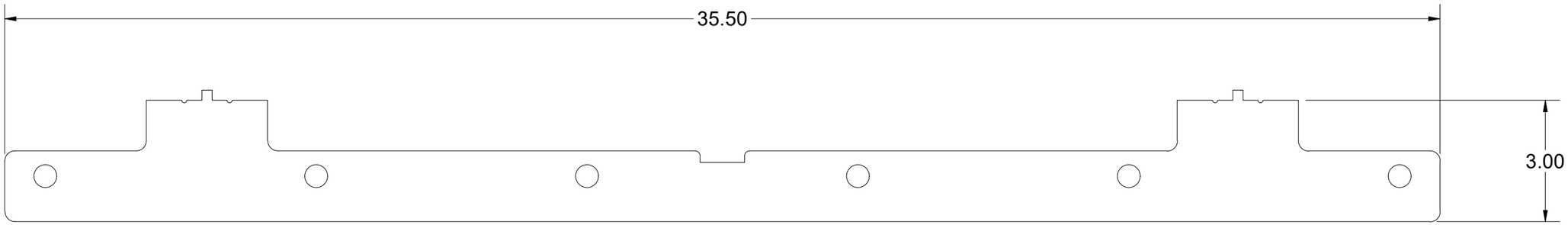

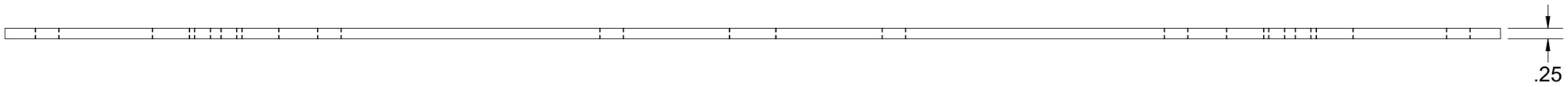

BEND TABLE				MATERIAL IFS: 100007735
BEND RADIUS	V-OPENING	BEND ANGLE	BEND DEDUCTION	MATERIAL THK: 0.25
-	-	-	-	MAT DESCRIPTION: STL ASTM A36 SM-HRPO RAW .250

JENSEN METALTECH
450 E. GLENDALE AVE. SPARKS. NV 89431
775-352-2716 FAX: 755-358-8127
JENSENMETALTECH.COM

©2024 Jensen Precast- All rights reserved.
All materials appearing as Jensen Precast documents and the like are proprietary work product and are protected under U.S. copyright and other laws.
Unless in conjunction with business conducted with Jensen Precast, any use of Jensen Precast work product without express, written consent is prohibited, and recipient is prohibited from distributing any and all work product to non-approved third parties under penalty of civil action.

NAME & DESCRIPTION:		REV:
200087246 Door Component Steel Lap Bar 36in, 2.5" Stiffener Offset		B-1-2
WEIGHT: 4.822 lbmass	DRAWN BY: R. Dohr	SHEET: 14 OF 14
CREATED: 5/2/2018	MODIFIED: 6/18/2024	

200075392.idw