NOTES
■ FOR COMPLETE DESIGN AND PRODUCT INFORMATION CONTACT JENSEN PRECAST.

BILL OF MATERIALS

ITEM	QTY	PART NUMBER	DESCRIPTION
1	31.155 ft^3	100011429	CONCRETE MIX GENERIC 7000 PSI
2	96.0000 in	100022114	STRUT C-CHANNEL 13/16 X 1-5/8 16GA SOLID GALV SHALLOW W-400/P4000
3	4	100005933	GROUND INSERTS BOTTLE ROCKET BRASS 1/2X16 STEEL ROD 12G69
4	4	100040446	ANCHOR RAPID LIFT TECH 5T CLUTCH 3.4375IN LONG MB RL-25
5	4	100037074	PULL IRON .5DIA 6 OH X 3W GALV XXX VALLEY NUTBOLT
6	1	300152920	REINFORCING MAT 300152920

200075214.idw

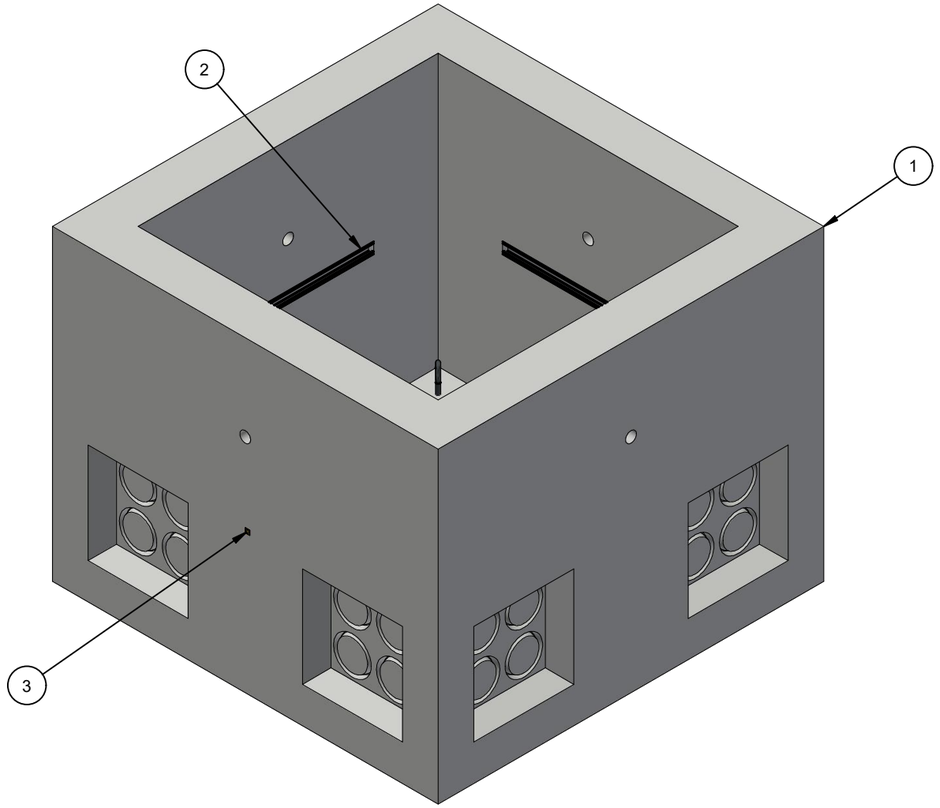

ISO LAYOUT

LIFTING NOTES
■ THIS CONCRETE PRODUCT IS DESIGNED TO BE LIFTED AT 3500 PSI WITH 4 LIFT CONNECTIONS EQUALLY LOADED TO 2 LIFTING POINTS AT A MINIMUM 60° SLING ANGLE, MEASURED FROM HORIZONTAL.

BURY DEPTH:	0.0' - 1.5' to Top		
WATER LEVEL:	0.0'	APPROX. WEIGHT:	4716.19 Lbs
DESIGN SPEC:	ACI 318,ASTM C857	LOADING SPEC:	Agency Specified
REINFORCEMENT TYPE:	Rebar	LIFTING TYPE:	Tech Erection Anchor

JENSEN PRECAST EST. 1968

WWW.JENSENPRECAST.COM

©2023 Jensen Precast- All rights reserved.
All materials appearing as Jensen Precast documents and the like are proprietary work product and are protected under U.S. copyright and other laws.
Unless in conjunction with business conducted with Jensen Precast, any use of Jensen Precast work product without express, written consent is prohibited, and recipient is prohibited from distributing any and all work product to non-approved third parties under penalty of civil action.

REVISION HISTORY			
REV	DESCRIPTION	DATE	BY
1	INITIAL RELEASE	3/2/2022	MF

DESCRIPTION:	Vault 4242x38 Rect. Bottom Section Knockout Sump CASTING LAYOUT		REV: A-2
PART NUMBER:	200075214	DRAWN BY: A.Cho	SHEET: 1 OF 2
CREATED:	4/10/2020	MODIFIED: 5/9/2023	

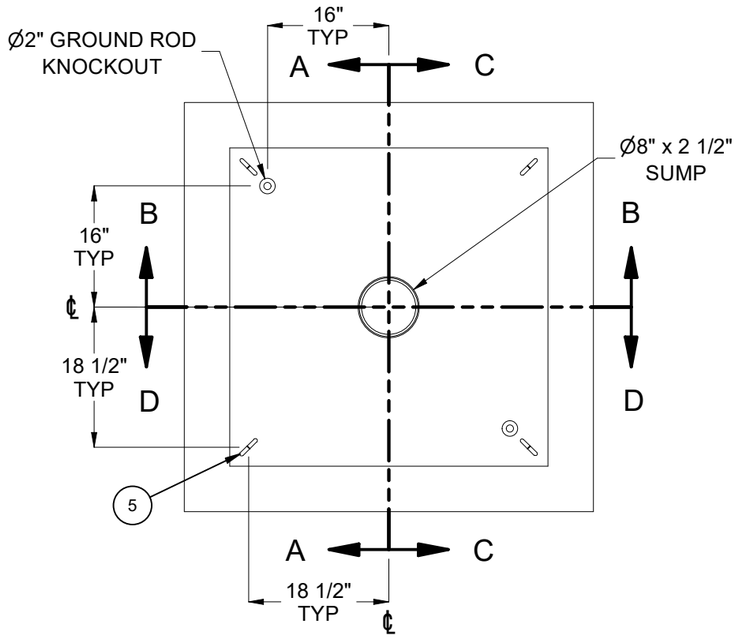

PLAN VIEW

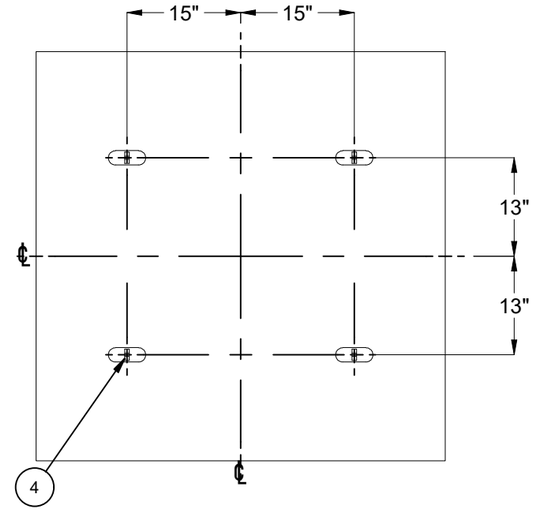

PLAN VIEW
(SHOWING DEMOLDING LIFTERS)

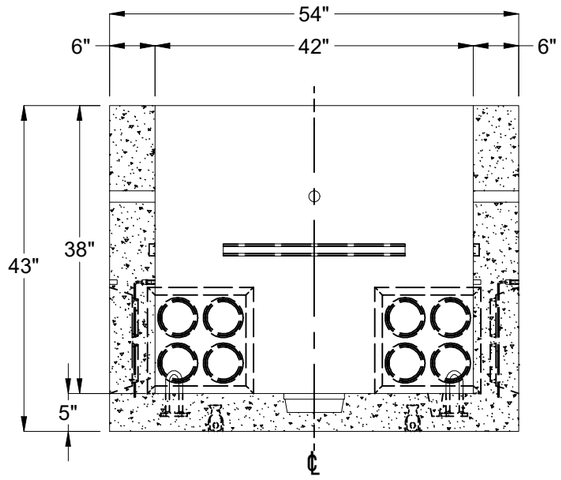

SECTION A-A

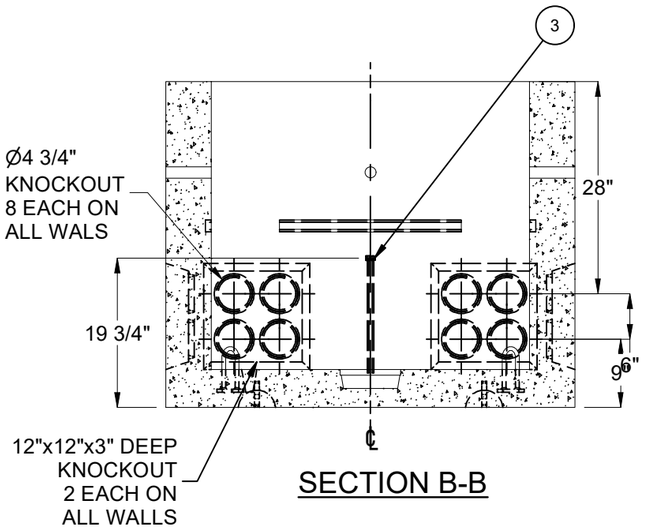

SECTION B-B

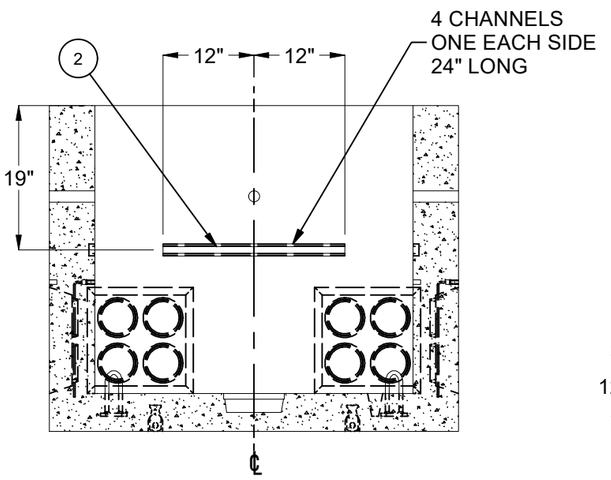

SECTION C-C

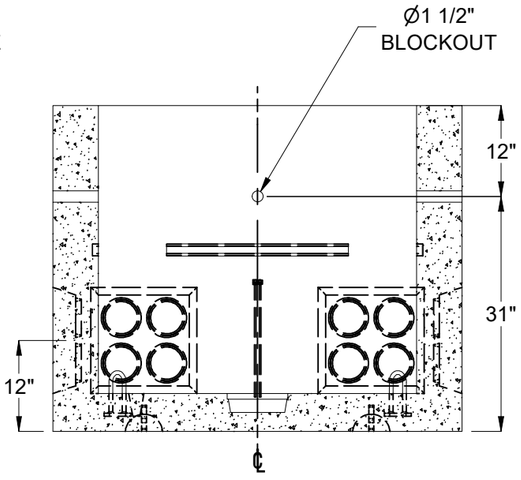

SECTION D-D

BURY DEPTH:	0.0' - 1.5' to Top		
WATER LEVEL:	0.0'	APPROX. WEIGHT:	4716.19 Lbs
DESIGN SPEC:	ACI 318,ASTM C857	LOADING SPEC:	Agency Specified
REINFORCEMENT TYPE:	Rebar	LIFTING TYPE:	Tech Erection Anchor

JENSEN PRECAST EST. 1968

WWW.JENSENPRECAST.COM

©2023 Jensen Precast- All rights reserved.
All materials appearing as Jensen Precast documents and the like are proprietary work product and are protected under U.S. copyright and other laws.
Unless in conjunction with business conducted with Jensen Precast, any use of Jensen Precast work product without express, written consent is prohibited, and recipient is prohibited from distributing any and all work product to non-approved third parties under penalty of civil action.

DESCRIPTION:	Vault 4242x38 Rect. Bottom Section Knockout Sump CASTING DRAWING		REV: A-2
PART NUMBER:	200075214	DRAWN BY:	A.Cho
CREATED:	4/10/2020	MODIFIED:	5/9/2023
			SHEET: 2 OF 2

200075214.idw