BILL OF MATERIALS

ITEM	UNIT QTY	QTY	PART NUMBER	DESCRIPTION
1	1	1	100001975	HN 1324x12 Concrete Box 3/8-16 Alum Nut
2	1	2	100004208	BOLT HEX 3/8-16 UNC 2.5 304SS
3	1	2	100009572	WASHER FLAT 3/8 WIDE TYPE A 304SS
4	1	1	100042298	HPC 1324 SMC Cover, Tier-22, Bolt Down, Nameplate

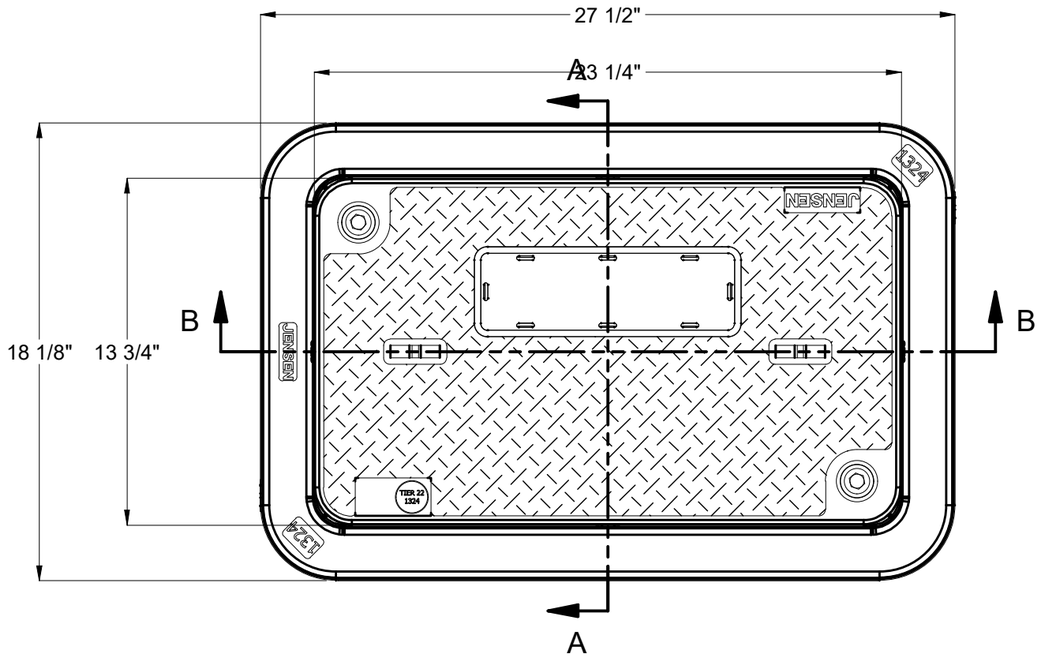

PLAN VIEW



POLYMER COVER

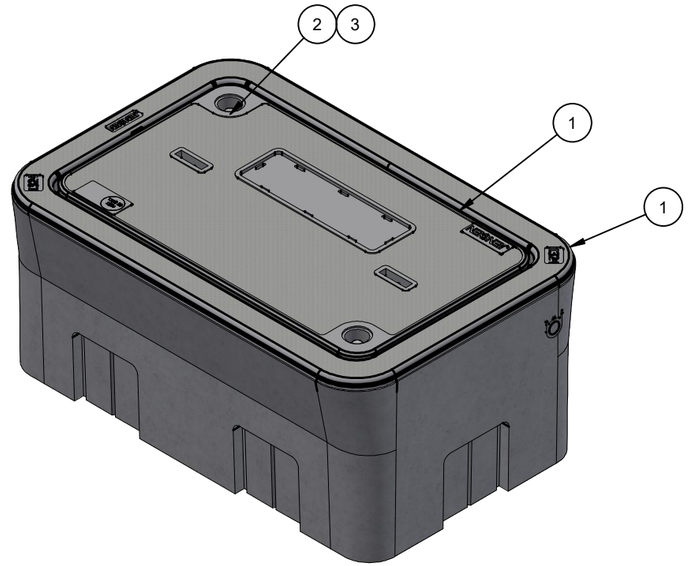

ISO VIEW

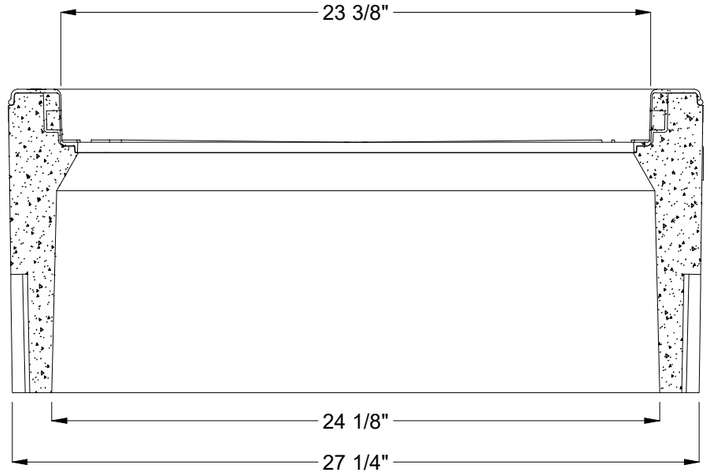

SECTION B-B

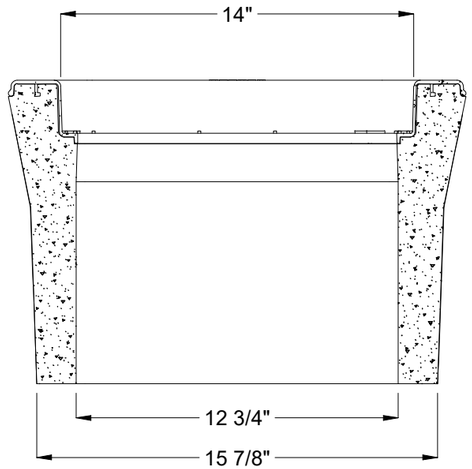

SECTION A-A

CHANGE HISTORY			
NO.	DESCRIPTION	DATE	BY
A	INITIAL RELEASE	04/28/2023	MB

BURY DEPTH:	N/A to N/A		
WATER LEVEL:	Below Structure	APPROX. WEIGHT:	162.08 Lbs
DESIGN SPEC:	ASTM C857	LOADING SPEC:	A-03 (300 psf)
AGENCY:		AGENCY SPEC:	

JENSEN PRECAST EST. 1968

WWW.JENSENPRECAST.COM

©2024 Jensen Precast- All rights reserved.
All materials appearing as Jensen Precast documents and the like are proprietary work product and are protected under U.S. copyright and other laws.
Unless in conjunction with business conducted with Jensen Precast, any use of Jensen Precast work product without express, written consent is prohibited, and recipient is prohibited from distributing any and all work product to non-approved third parties under penalty of civil action.

DESCRIPTION:	HN 1324x12 Concrete/SMC Assembly 3/8-16 Alum Nut Nameplate LAYOUT REVIEW		REV: A-1
PART NUMBER:	200075075	DRAWN BY:	M. Baumann
CREATED:	4/20/2023	MODIFIED:	1/3/2024
			SHEET: 1 OF 1

200075075.idw