NOTES
■ FOR COMPLETE DESIGN AND PRODUCT INFORMATION CONTACT JENSEN PRECAST.

BILL OF MATERIALS

ITEM	UNIT QTY	QTY	PART NUMBER	DESCRIPTION
1	4.740 ft^3	4.740 ft^3	100002728	CONCRETE MIX GENERIC 4000 PSI
2	1	1	200074971	REINFORCING MAT 200074971

200074979.idw

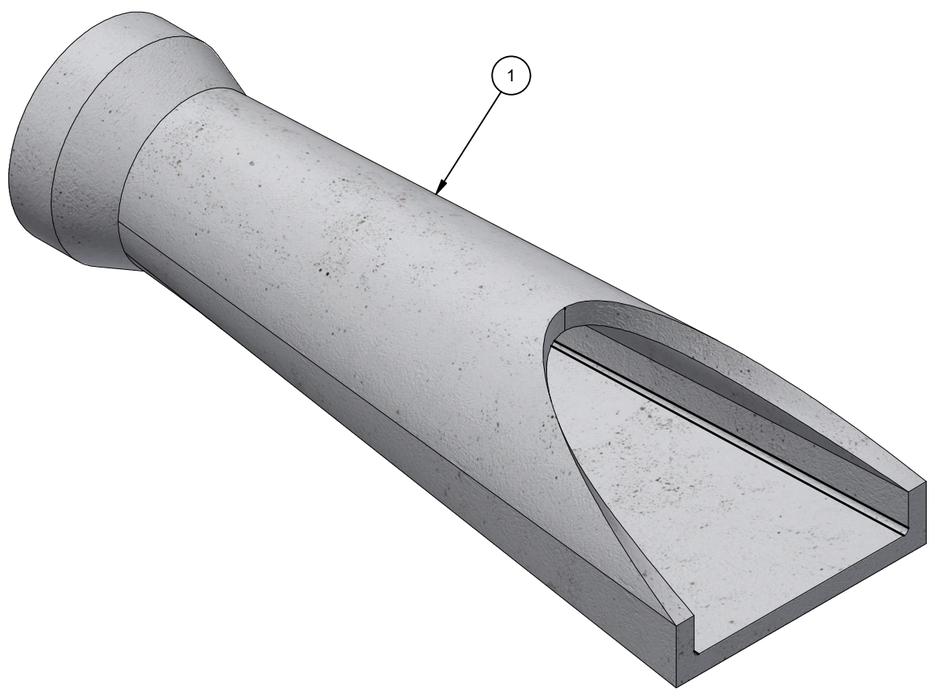

ISO VIEW

CHANGE HISTORY			
NO.	DESCRIPTION	DATE	BY
1	2303-55064	4/19/2023	JW

BURY DEPTH:	to		
WATER LEVEL:		APPROX. WEIGHT:	712.41 Lbs
DESIGN SPEC:	ASTM C76/AASHTO M170	LOADING SPEC:	
REINFORCEMENT TYPE:	WWR Plain	LIFTING TYPE:	None

JENSEN PRECAST EST. 1968

WWW.JENSENPRECAST.COM

©2024 Jensen Precast- All rights reserved.
All materials appearing as Jensen Precast documents and the like are proprietary work product and are protected under U.S. copyright and other laws.
Unless in conjunction with business conducted with Jensen Precast, any use of Jensen Precast work product without express, written consent is prohibited, and recipient is prohibited from distributing any and all work product to non-approved third parties under penalty of civil action.

DESCRIPTION:	RCP P12 Bell - Flared 4x24 78.75L CASTING LAYOUT		REV: A-5
PART NUMBER:	200074979	DRAWN BY:	M. Lincoln
CREATED:	4/19/2023	MODIFIED:	1/10/2024
			SHEET: 1 OF 2

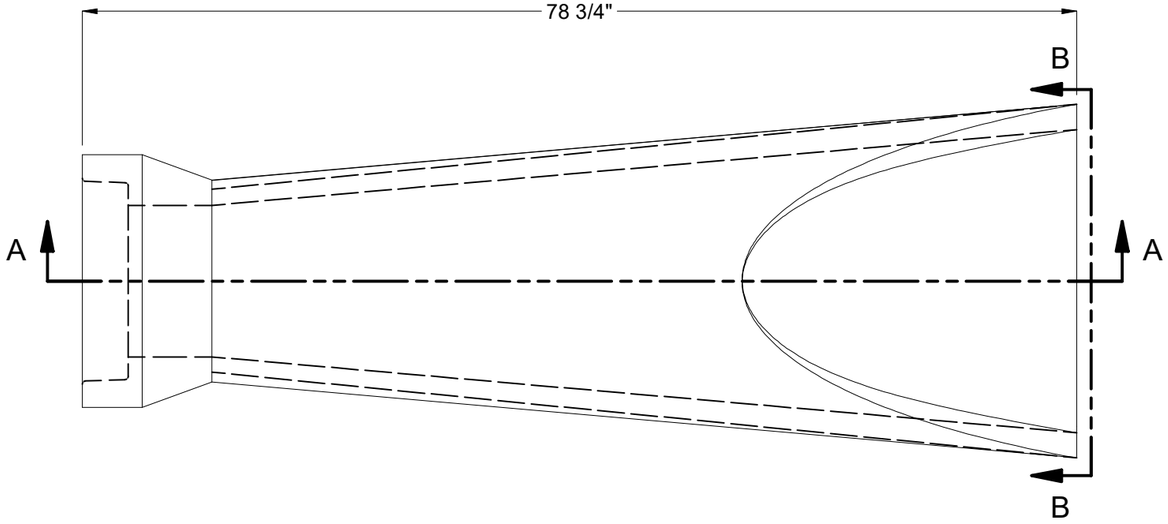

PLAN VIEW

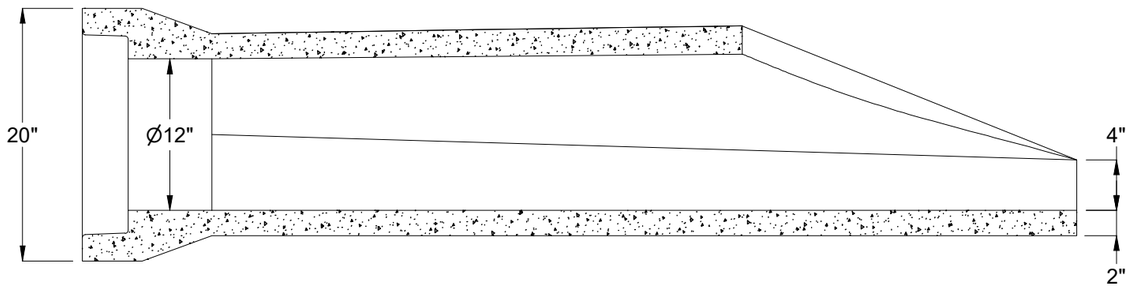

SECTION A-A

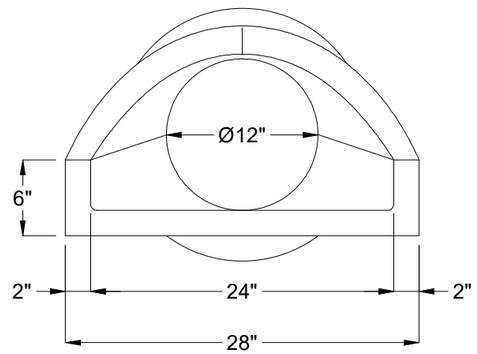

VIEW B-B

BURY DEPTH:	to		
WATER LEVEL:		APPROX. WEIGHT:	712.41 Lbs
DESIGN SPEC:	ASTM C76/AASHTO M170	LOADING SPEC:	
REINFORCEMENT TYPE:	WWR Plain	LIFTING TYPE:	None

JENSEN PRECAST EST. 1968

WWW.JENSENPRECAST.COM

©2024 Jensen Precast- All rights reserved.
All materials appearing as Jensen Precast documents and the like are proprietary work product and are protected under U.S. copyright and other laws.
Unless in conjunction with business conducted with Jensen Precast, any use of Jensen Precast work product without express, written consent is prohibited, and recipient is prohibited from distributing any and all work product to non-approved third parties under penalty of civil action.

DESCRIPTION:	RCP P12 Bell - Flared 4x24 78.75L CASTING DRAWING		REV: A-5
PART NUMBER:	200074979	DRAWN BY:	M. Lincoln
CREATED:	4/19/2023	MODIFIED:	1/10/2024
			SHEET: 2 OF 2

200074979.idw