NOTES
■ FOR COMPLETE DESIGN AND PRODUCT INFORMATION CONTACT JENSEN PRECAST.

BILL OF MATERIALS

ITEM	UNIT QTY	QTY	PART NUMBER	DESCRIPTION
1	78.996 ft^3	78.996 ft^3	100011429	CONCRETE MIX GENERIC 7000 PSI
2	84.0000 in	168.0000 in	100022114	STRUT C-CHANNEL 13/16 X 1-5/8 16GA SOLID GALV SHALLOW W-400/P4000
3	1	2	100041375	GROUND INSERT BOTTLE ROCKET 1/2-13 BRONZE w/ 0.375x16" STEEL ROD
4	1	12	100040446	ANCHOR RAPID LIFT TECH 5T CLUTCH 3.4375IN LONG MB RL-25
5	1	1	300153517	REINFORCING MAT 300153517

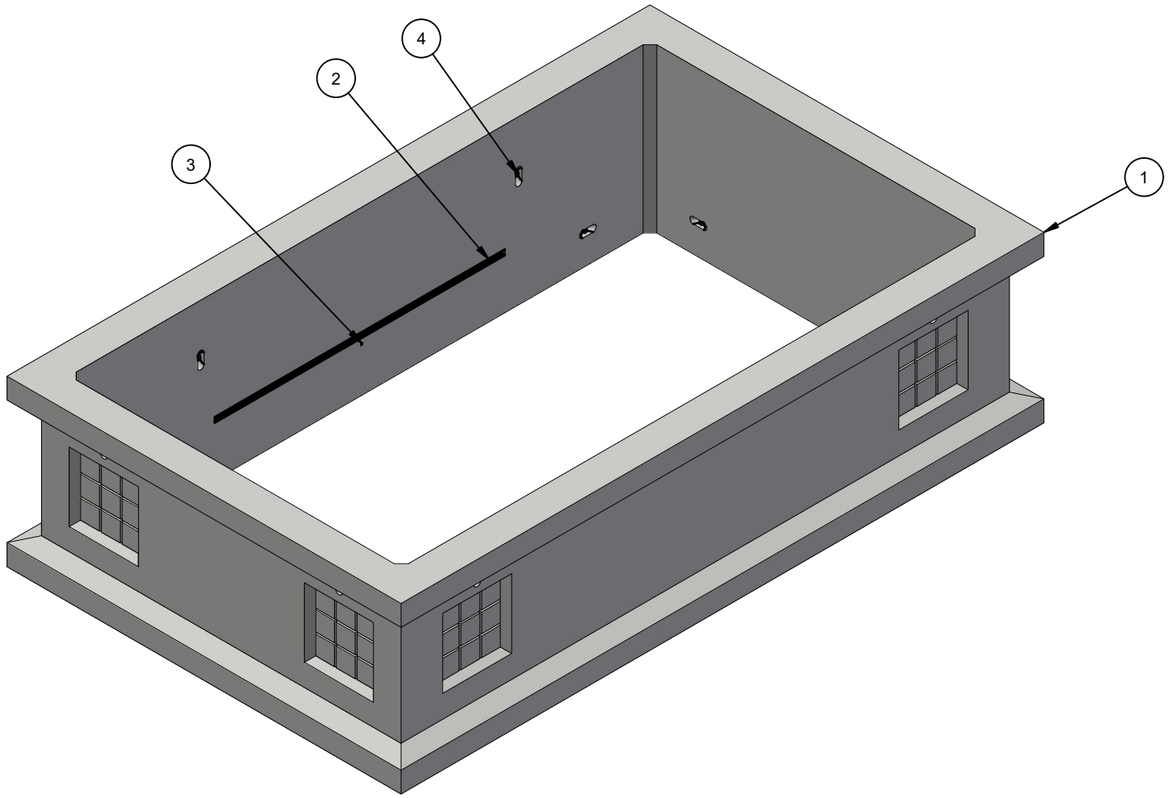

ISO REF

LIFTING NOTES
■ THIS CONCRETE PRODUCT IS DESIGNED TO BE LIFTED AT 3000 PSI WITH 4 LIFT CONNECTIONS EQUALLY LOADED TO 4 LIFTING POINTS AT A MINIMUM 60° SLING ANGLE, MEASURED FROM HORIZONTAL.
*All rigging shall be design by a qualified professional. Loading diagrams show illustrations of possible rigging setups to achieve the required sling angle and load leg equalization. Other valid rigging configurations are possible. A qualified professional must be consulted prior to lifting.

RIGGING DIAGRAM*	C
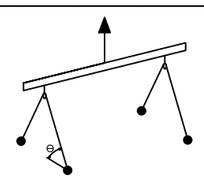	

BURY DEPTH:	1.3' - 2.3' to Top		
WATER LEVEL:	3.0'	APPROX. WEIGHT:	11951.48 Lbs
DESIGN SPEC:	ACI 318,ASTM C857	LOADING SPEC:	A-16 (AASHTO HS20-44)
REINFORCEMENT TYPE:	Rebar	LIFTING TYPE:	Tech Erection Anchor

JENSEN PRECAST EST. 1968

WWW.JENSENPRECAST.COM

©2024 Jensen Precast- All rights reserved.
All materials appearing as Jensen Precast documents and the like are proprietary work product and are protected under U.S. copyright and other laws.
Unless in conjunction with business conducted with Jensen Precast, any use of Jensen Precast work product without express, written consent is prohibited, and recipient is prohibited from distributing any and all work product to non-approved third parties under penalty of civil action.

CHANGE HISTORY			
NO.	DESCRIPTION	DATE	BY
A	DRAWING CREATED	4/17/2023	E.Fine

DESCRIPTION: Riser 96168x48 Knockout Upper Riser Tacoma Power CASTING LAYOUT				REV: A-11
PART NUMBER:	200074898	DRAWN BY:	E.Fine	SHEET: 1 OF 2
CREATED:	4/17/2023	MODIFIED:	7/1/2024	

200074898.idw

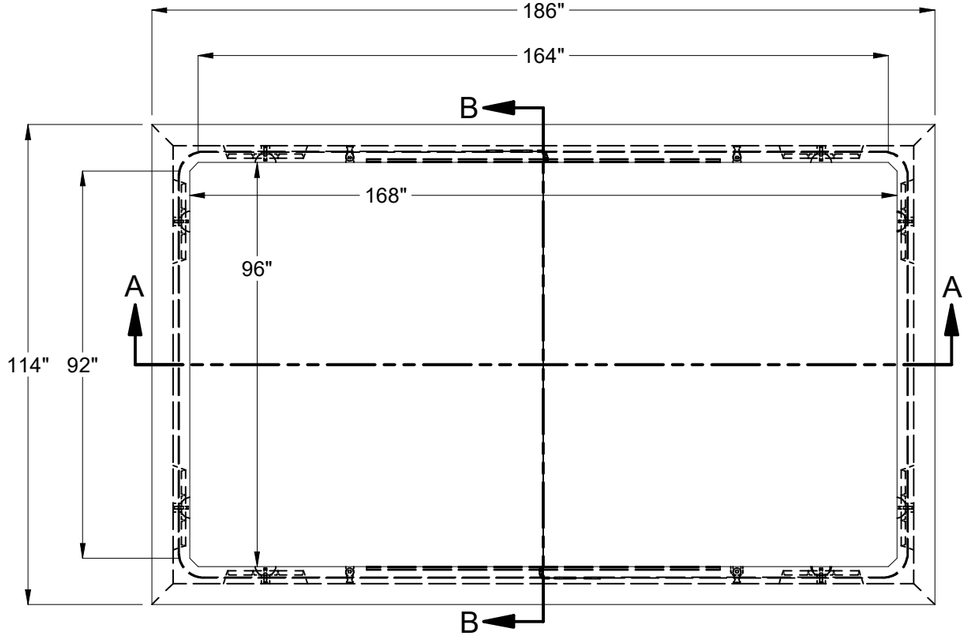

PLAN VIEW

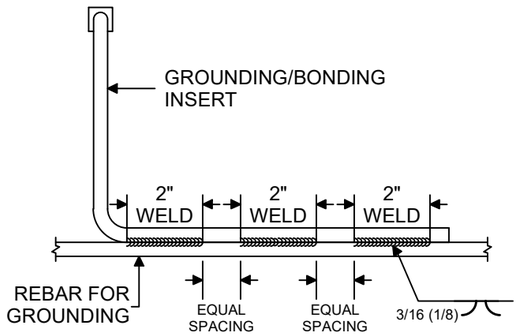

CONNECTION DETAIL

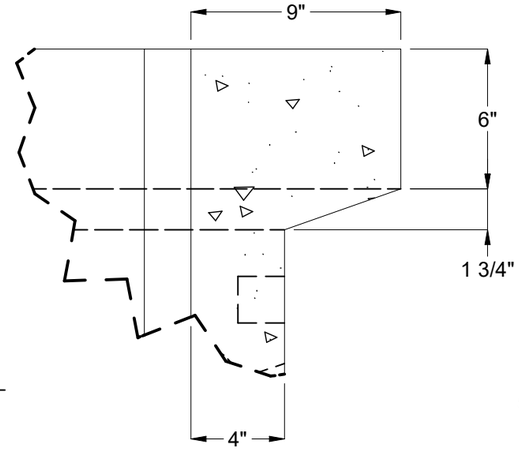

TOP JOINT

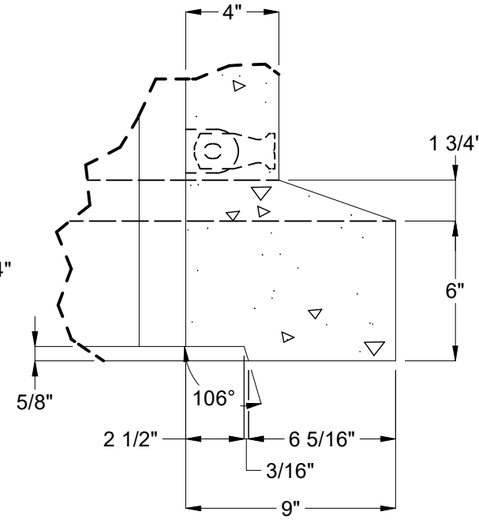

BOTTOM JOINT

200074898.idw

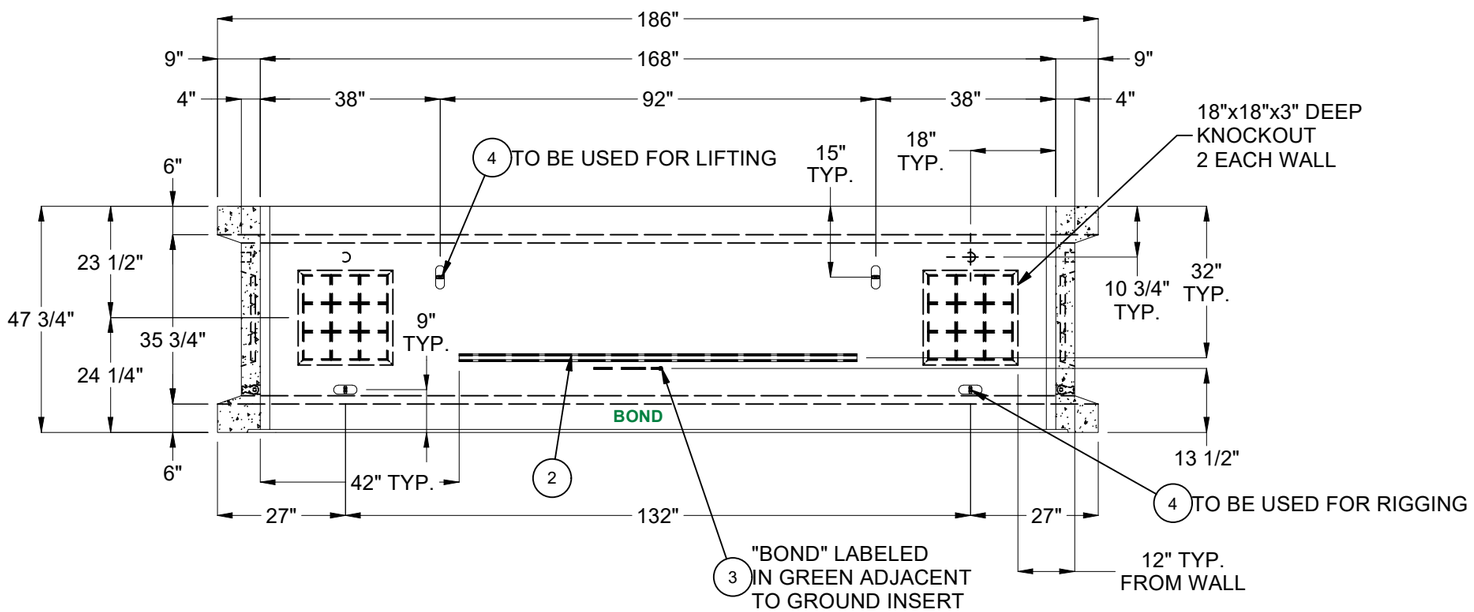

SECTION A-A

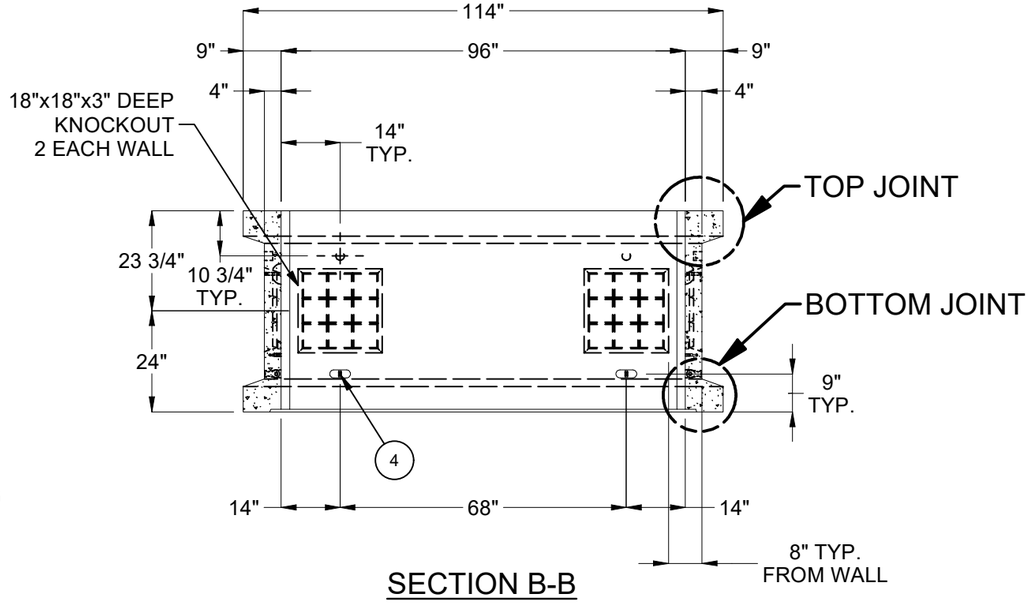

SECTION B-B

BURY DEPTH:	1.3' - 2.3' to Top		
WATER LEVEL:	3.0'	APPROX. WEIGHT:	11951.48 Lbs
DESIGN SPEC:	ACI 318,ASTM C857	LOADING SPEC:	A-16 (AASHTO HS20-44)
REINFORCEMENT TYPE:	Rebar	LIFTING TYPE:	Tech Erection Anchor

JENSEN PRECAST EST. 1968

WWW.JENSENPRECAST.COM

©2024 Jensen Precast- All rights reserved.
All materials appearing as Jensen Precast documents and the like are proprietary work product and are protected under U.S. copyright and other laws.
Unless in conjunction with business conducted with Jensen Precast, any use of Jensen Precast work product without express, written consent is prohibited, and recipient is prohibited from distributing any and all work product to non-approved third parties under penalty of civil action.

DESCRIPTION:	Riser 96168x48 Knockout Upper Riser Tacoma Power CASTING DRAWING		REV: A-11
PART NUMBER:	200074898	DRAWN BY:	E.Fine
CREATED:	4/17/2023	MODIFIED:	7/1/2024
			SHEET: 2 OF 2