NOTES
■ FOR COMPLETE DESIGN AND PRODUCT INFORMATION CONTACT JENSEN PRECAST.

BILL OF MATERIALS

ITEM	UNIT QTY	QTY	PART NUMBER	DESCRIPTION
1	6.729 ft^3	6.729 ft^3	100011429	CONCRETE MIX GENERIC 7000 PSI
4	1	4	100035848	Insert Ferrule Loop 0.75 x 3.5" 304SS (F42 or Equiv.)
5	1	1	100040388	PLATE 1x4 BRASS
6	1	1	300154326	REINFORCING MAT 300154326
7	1	1	200061796	CAS1-3333-CHF4-DP-G-BD-GR-SL-PNW-OH07-332

200074195.idw

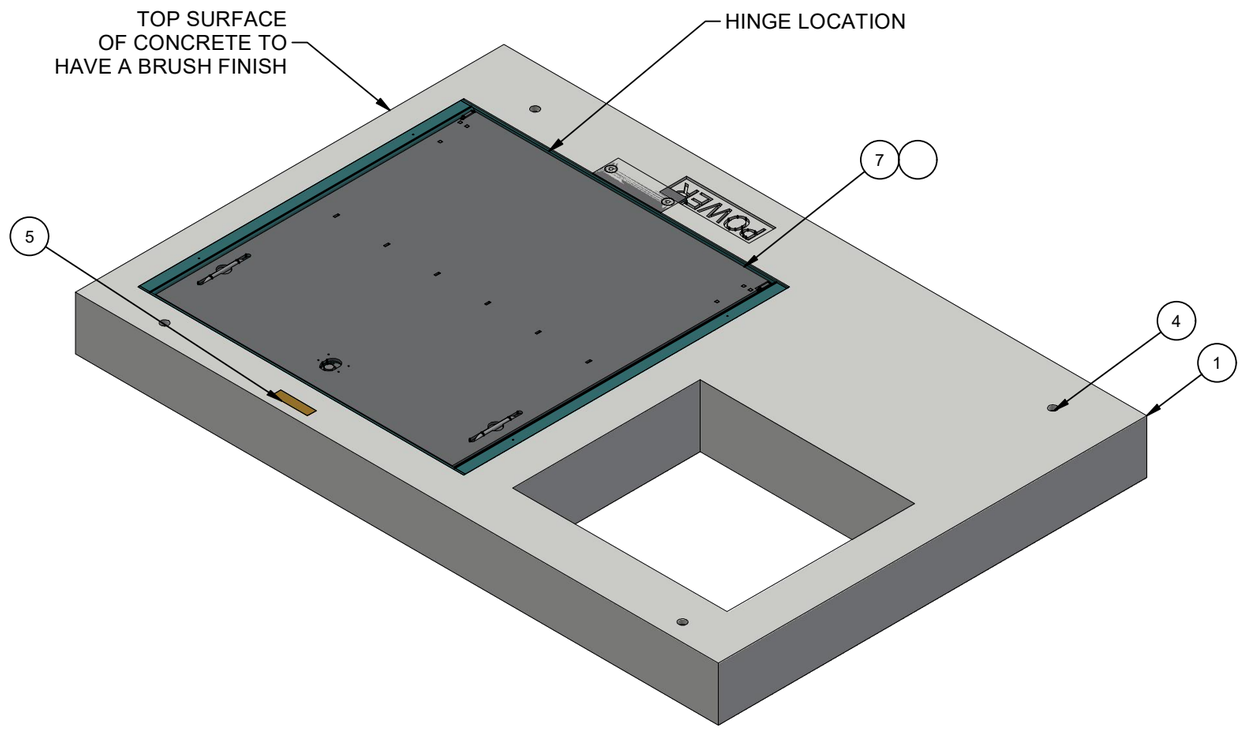

ISO LAYOUT

LIFTING NOTES
■ THIS CONCRETE PRODUCT IS DESIGNED TO BE LIFTED AT 3000 PSI WITH 4 LIFT CONNECTIONS EQUALLY LOADED TO 4 LIFTING POINTS AT A MINIMUM 75° SLING ANGLE, MEASURED FROM HORIZONTAL.
*All rigging shall be design by a qualified professional. Loading diagrams show illustrations of possible rigging setups to achieve the required sling angle and load leg equalization. Other valid rigging configurations are possible. A qualified professional must be consulted prior to lifting.

RIGGING DIAGRAM*	C
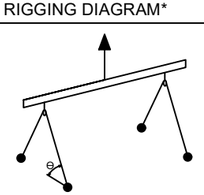	

BURY DEPTH:	0.0' - 0.0' to Top		
WATER LEVEL:	5.0'	APPROX. WEIGHT:	1188.03 Lbs
DESIGN SPEC:	ACI 318,ASTM C857	LOADING SPEC:	A-16 (AASHTO HS20-44)
REINFORCEMENT TYPE:	Rebar	LIFTING TYPE:	Insert

JENSEN PRECAST EST. 1968

WWW.JENSENPRECAST.COM

©2024 Jensen Precast- All rights reserved.
All materials appearing as Jensen Precast documents and the like are proprietary work product and are protected under U.S. copyright and other laws.
Unless in conjunction with business conducted with Jensen Precast, any use of Jensen Precast work product without express, written consent is prohibited, and recipient is prohibited from distributing any and all work product to non-approved third parties under penalty of civil action.

CHANGE HISTORY			
NO.	DESCRIPTION	DATE	BY
A	DRAWING CREATED	3/27/2023	E.Fine

DESCRIPTION: Vault 4266x7 Slab Top 36"x36"E, 21"x24"E Cast-In Cover SnoPUD STD CASTING LAYOUT				REV: A-8
PART NUMBER:	200074195	DRAWN BY:	E.Fine	SHEET: 1 OF 2
CREATED:	3/27/2023	MODIFIED:	1/18/2024	

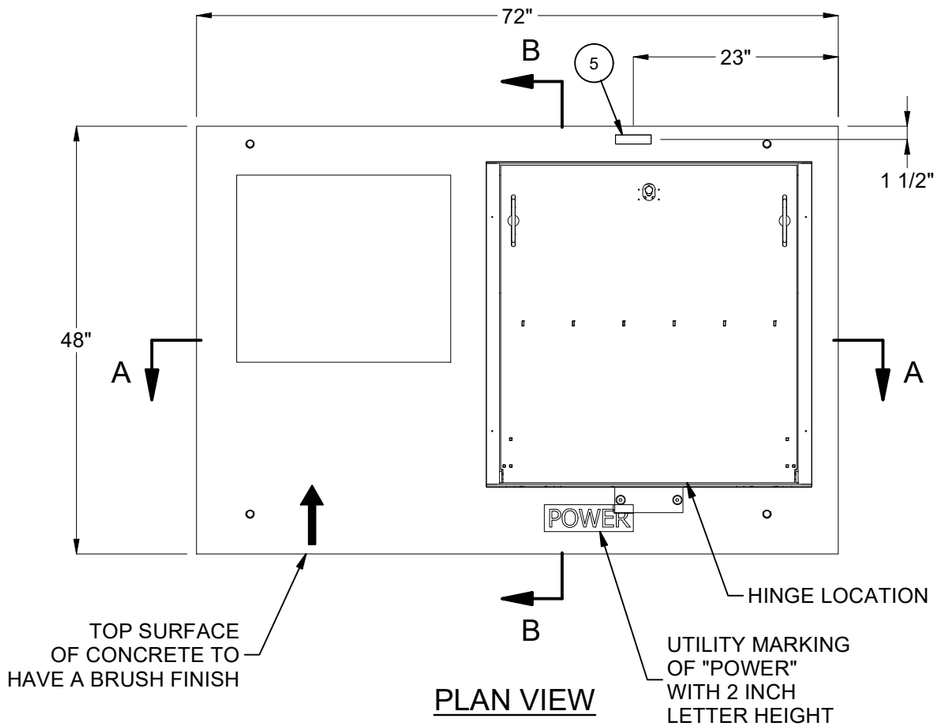

PLAN VIEW

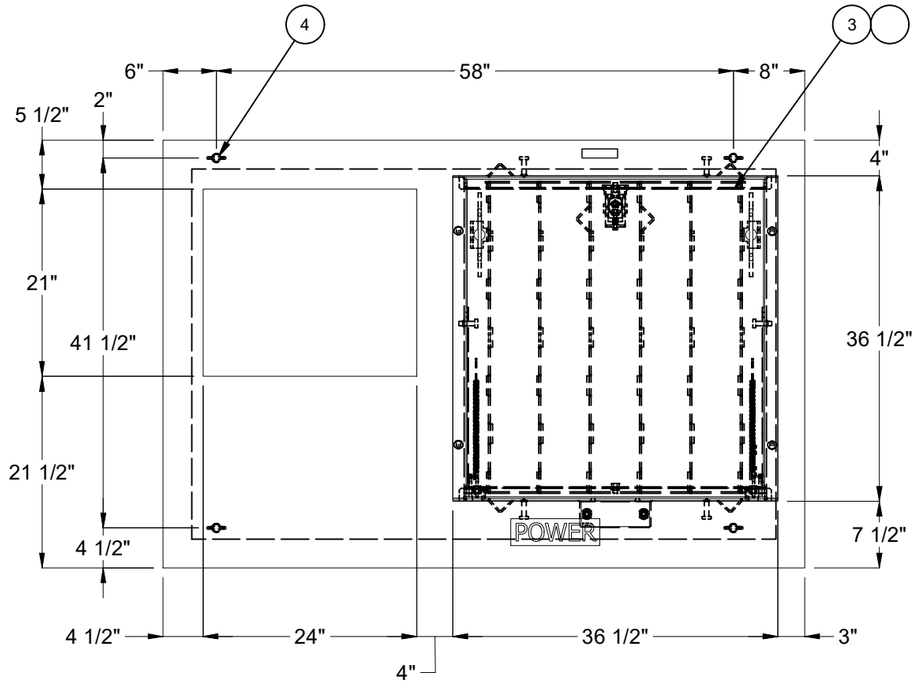

PLAN VIEW
(SHOWING OBJECT DIMENSIONS)

200074195.idw

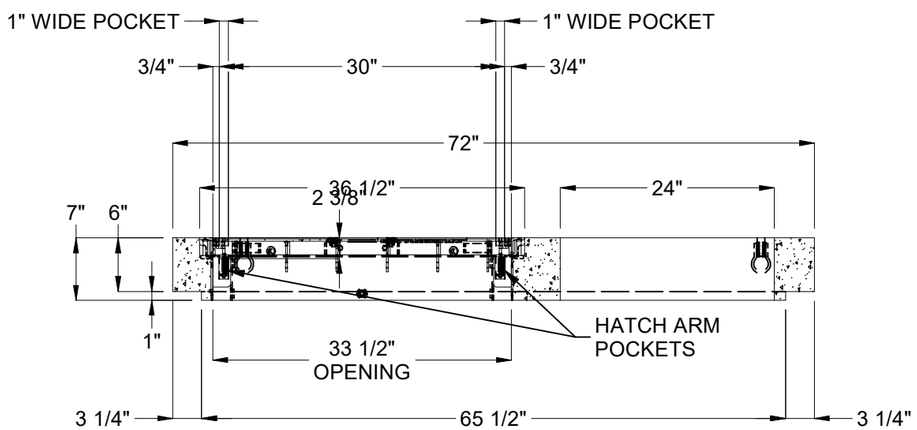

SECTION A-A

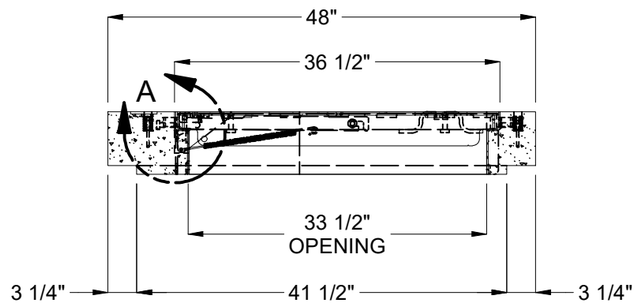

SECTION B-B

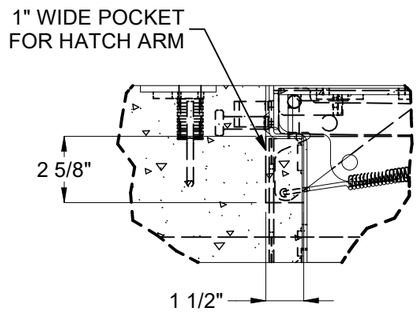

DETAIL A
(HATCH ARM POCKET)

BURY DEPTH:	0.0' - 0.0' to Top		
WATER LEVEL:	5.0'	APPROX. WEIGHT:	1188.03 Lbs
DESIGN SPEC:	ACI 318,ASTM C857	LOADING SPEC:	A-16 (AASHTO HS20-44)
REINFORCEMENT TYPE:	Rebar	LIFTING TYPE:	Insert

JENSEN PRECAST EST. 1968

WWW.JENSENPRECAST.COM

©2024 Jensen Precast- All rights reserved.
All materials appearing as Jensen Precast documents and the like are proprietary work product and are protected under U.S. copyright and other laws.
Unless in conjunction with business conducted with Jensen Precast, any use of Jensen Precast work product without express, written consent is prohibited, and recipient is prohibited from distributing any and all work product to non-approved third parties under penalty of civil action.

DESCRIPTION:	Vault 4266x7 Slab Top 36"x36"E, 21"x24"E Cast-In Cover SnoPUD STD CASTING DRAWING		
PART NUMBER:	200074195	DRAWN BY:	E.Fine
CREATED:	3/27/2023	MODIFIED:	1/18/2024

REV:	A-8
SHEET:	2 OF 2