NOTES
■ FOR COMPLETE DESIGN AND PRODUCT INFORMATION CONTACT JENSEN PRECAST.

BILL OF MATERIALS

ITEM	UNIT QTY	QTY	PART NUMBER	DESCRIPTION
1	1	1	100004625	RCP P42B Bell - Flared 23x78 96L
2	3.159 ft^3	3.159 ft^3	100011427	CONCRETE MIX GENERIC 6000 PSI
3	24.036 ft^2	24.036 ft^2	100028208	REINF WWR 2Vx8 W7.0 x W3.0 x 94"(+0,+1) x 600' Reg 3WF - Area .42
4	1	1	100004703	RCP PE2438 Horizontal Class 4 Bell - Spigot 96L

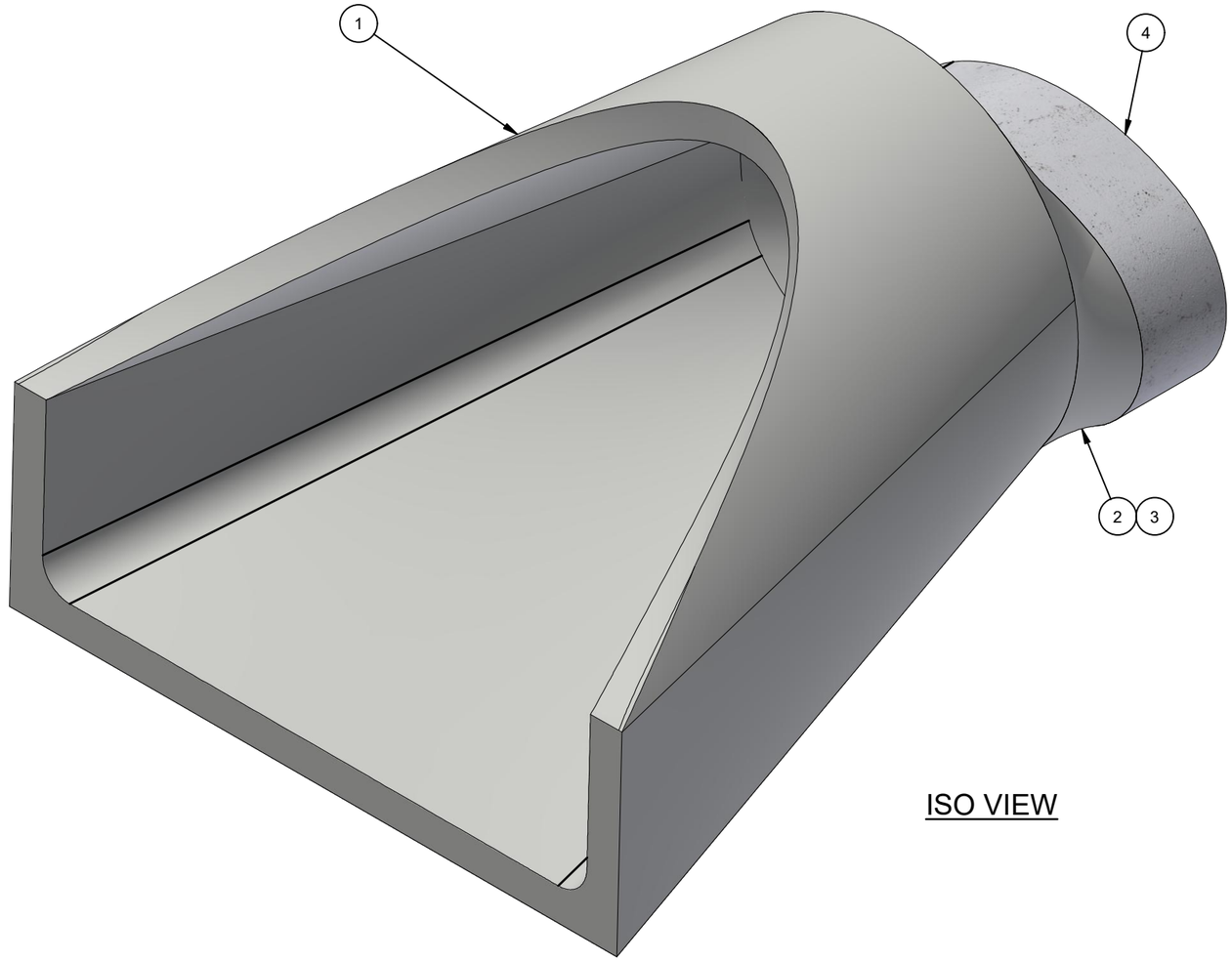

ISO VIEW

200074176.idw

CHANGE HISTORY			
NO.	DESCRIPTION	DATE	BY
1	PRELIMINARY SUBMITTAL - 2303-55046	3/28/2023	MF
2			
3			

BURY DEPTH:	to		
WATER LEVEL:		APPROX. WEIGHT:	5009.22 Lbs
DESIGN SPEC:	ASTM C507	LOADING SPEC:	
REINFORCEMENT TYPE:	WWR Deformed	LIFTING TYPE:	None

JENSEN PRECAST EST. 1968

WWW.JENSENPRECAST.COM

©2023 Jensen Precast- All rights reserved.
All materials appearing as Jensen Precast documents and the like are proprietary work product and are protected under U.S. copyright and other laws.
Unless in conjunction with business conducted with Jensen Precast, any use of Jensen Precast work product without express, written consent is prohibited, and recipient is prohibited from distributing any and all work product to non-approved third parties under penalty of civil action.

DESCRIPTION:	RCP PE2438 Horizontal Bell - Flared 23x78 108L CASTING LAYOUT		REV: A-2
PART NUMBER:	200074176	DRAWN BY:	M. Foster
CREATED:	3/3/2023	MODIFIED:	3/30/2023
			SHEET: 1 OF 2

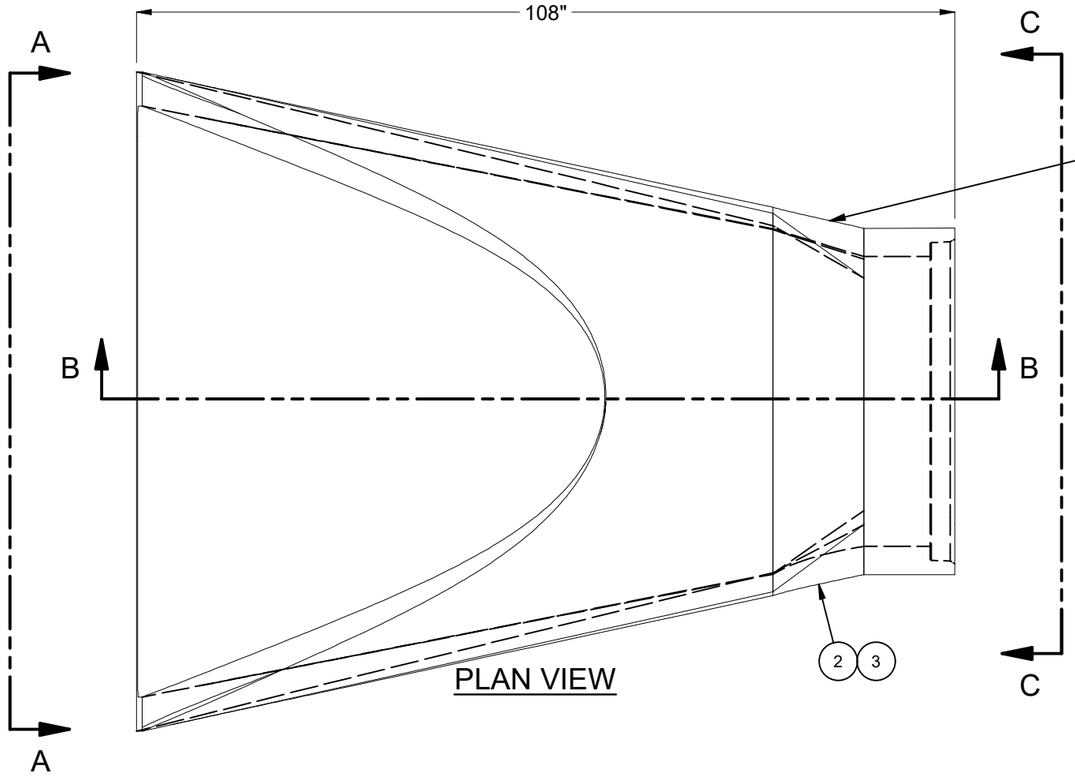

PLAN VIEW

EXPOSE TRANSITIONING END OF PIPE & FLARED SECTION REINFORCING MAT A MINIMUM OF 12".

LAYER WRAP THE EXPOSED WWR WITH THE MINIMUM STEEL AREAS BELOW

As = 0.34 IN^2/FT ADDED TO BOTH THE INSIDE AND OUTSIDE MATS

SPOT WELD OR TIE WWR AS REQUIRED TO HOLD WWR IN PLACE

BUILD UP COLLAR OF 6000 PSI CONCRETE ON OUTSIDE AND TROWEL SMOOTH INSIDE.

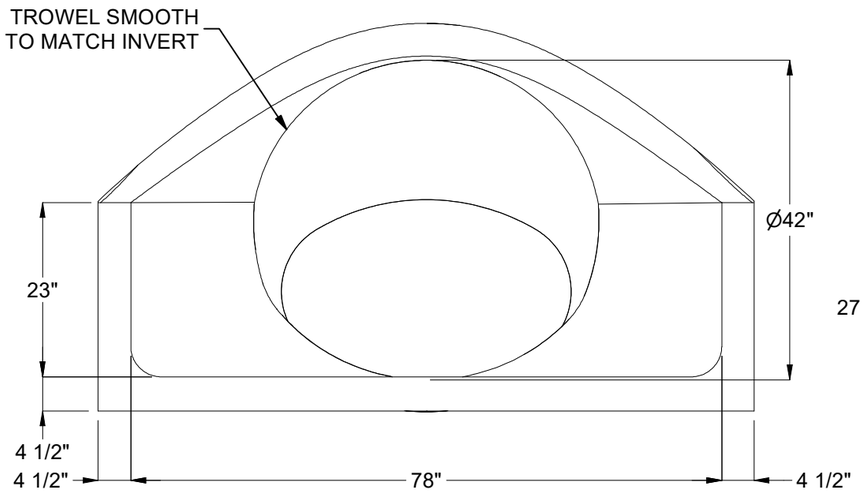

VIEW A-A
FLARED END

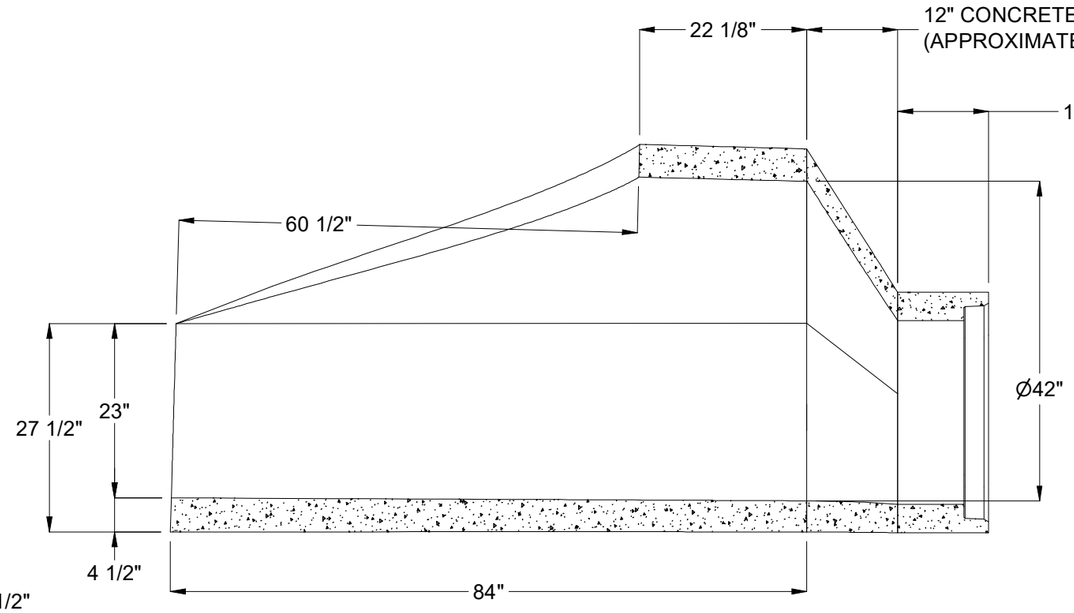

SECTION B-B

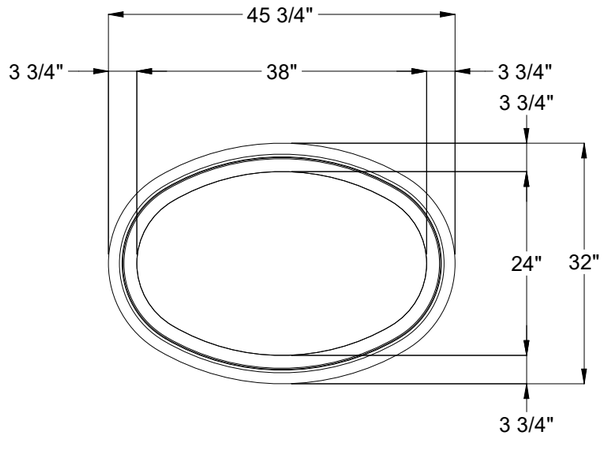

VIEW C-C
RCP END

BURY DEPTH:	to		
WATER LEVEL:		APPROX. WEIGHT:	5009.22 Lbs
DESIGN SPEC:	ASTM C507	LOADING SPEC:	
REINFORCEMENT TYPE:	WWR Deformed	LIFTING TYPE:	None

JENSEN PRECAST EST. 1968

WWW.JENSENPRECAST.COM

©2023 Jensen Precast- All rights reserved.
All materials appearing as Jensen Precast documents and the like are proprietary work product and are protected under U.S. copyright and other laws.
Unless in conjunction with business conducted with Jensen Precast, any use of Jensen Precast work product without express, written consent is prohibited, and recipient is prohibited from distributing any and all work product to non-approved third parties under penalty of civil action.

DESCRIPTION:	RCP PE2438 Horizontal Bell - Flared 23x78 108L CASTING DRAWING		REV: A-2
PART NUMBER:	200074176	DRAWN BY:	M. Foster
CREATED:	3/3/2023	MODIFIED:	3/30/2023
			SHEET: 2 OF 2

200074176.idw