NOTES
■ FOR COMPLETE DESIGN AND PRODUCT INFORMATION CONTACT JENSEN PRECAST.

BILL OF MATERIALS

ITEM	QTY	PART NUMBER	DESCRIPTION
1	1	200033638	Drop Inlet 3636x36 Rect. Bottom Section Flat Thinwall
2	1	100039688	GRATE FRAME 3636 STEEL GALV EZ FV-1-3636-R1G D&L
3	1	100039689	GRATE 3636 STEEL TRF GALV FV-1-3636-02G D&L
4	AS REQUIRED	400002622	Riser 3636x12 Rect. Riser
5	AS REQUIRED	400002620	Riser 3636x6 Rect. Riser

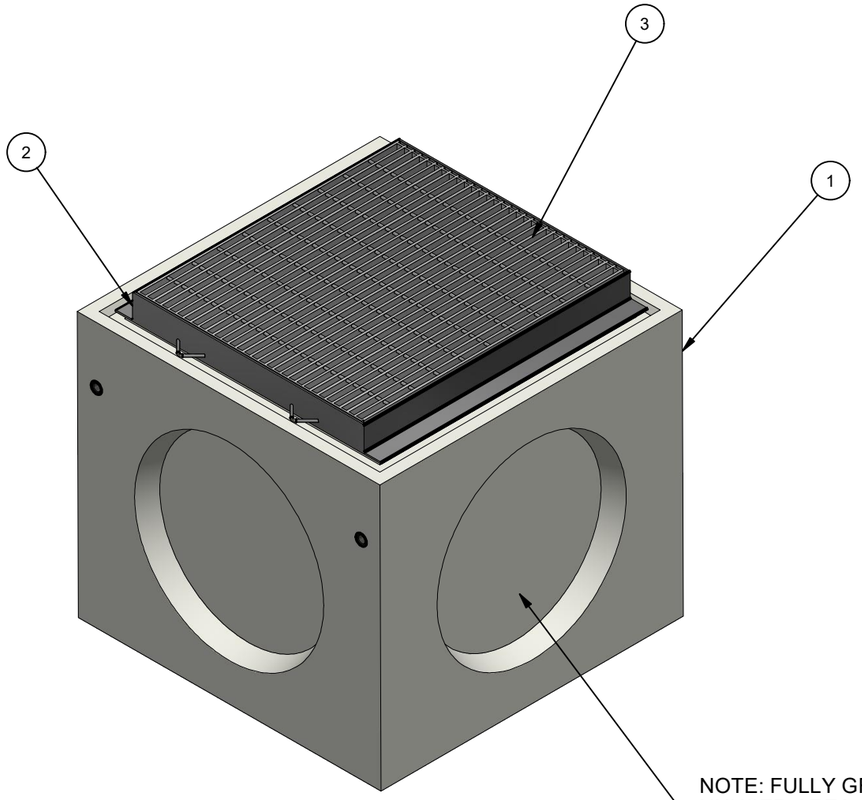

NOTE: FULLY GROUT UNUSED AREA TYP.

ISO VIEW

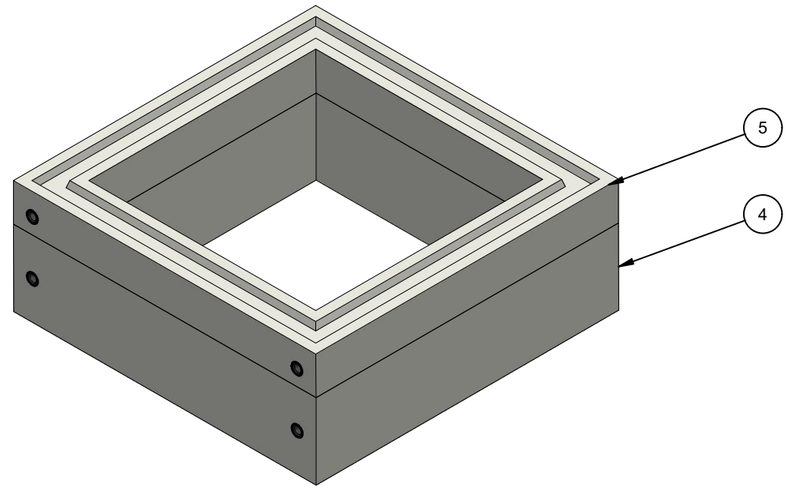

OPTIONAL RISERS

CHANGE HISTORY			
NO.	DESCRIPTION	DATE	BY
1	PRELIMINARY SUBMITTAL 2208-54161-10	3/23/23	CF
2			
3			

BURY DEPTH:	0.0' - 12.0' to Top		
WATER LEVEL:	5.0'	APPROX. WEIGHT:	5762.5 Lbs
DESIGN SPEC:	ACI 318,ASTM C890	LOADING SPEC:	A-16 (AASHTO HS20-44)
AGENCY:		AGENCY SPEC:	

JENSEN PRECAST EST. 1968

WWW.JENSENPRECAST.COM

©2023 Jensen Precast- All rights reserved.
All materials appearing as Jensen Precast documents and the like are proprietary work product and are protected under U.S. copyright and other laws.
Unless in conjunction with business conducted with Jensen Precast, any use of Jensen Precast work product without express, written consent is prohibited, and recipient is prohibited from distributing any and all work product to non-approved third parties under penalty of civil action.

DESCRIPTION:	Drainage 3636x36 Layout Assembly 36"x36"C LAYOUT REVIEW		REV: A-5
PART NUMBER:	200074084	DRAWN BY:	C. Flores
CREATED:	3/23/2023	MODIFIED:	3/29/2023
			SHEET: 1 OF 2

200074084.idw

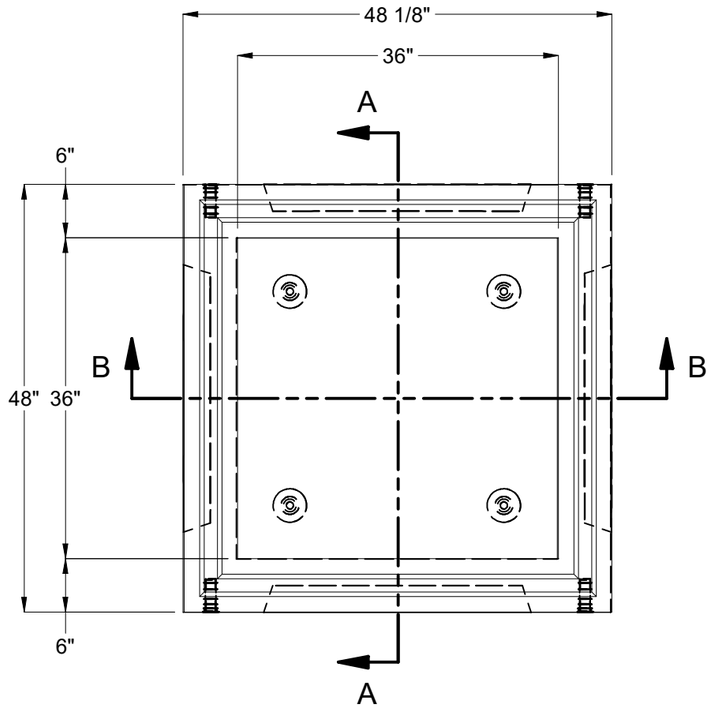

PLAN VIEW

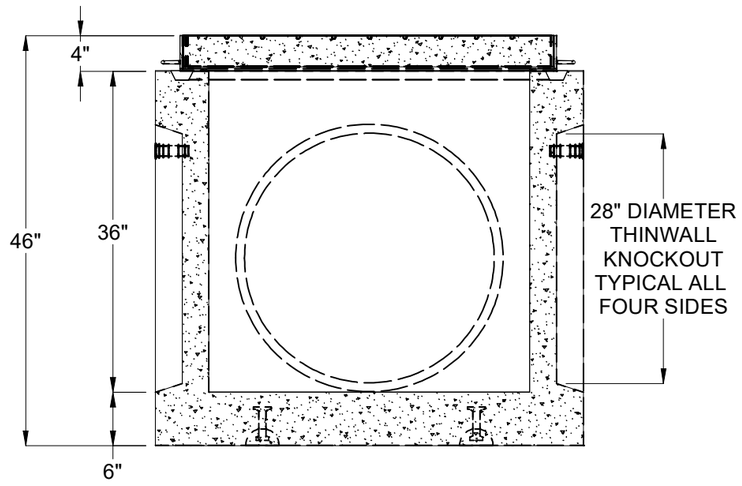

SECTION A-A

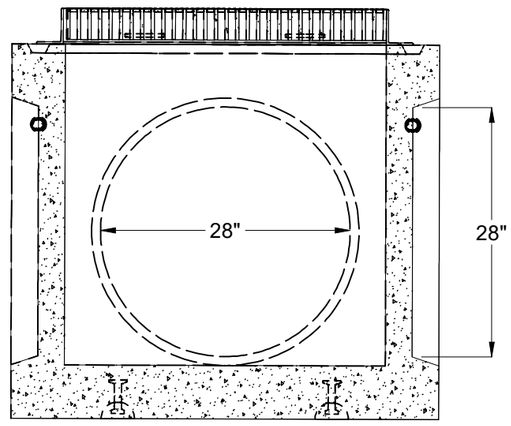

SECTION B-D

BURY DEPTH:	0.0' - 12.0' to Top		
WATER LEVEL:	5.0'	APPROX. WEIGHT:	5762.5 Lbs
DESIGN SPEC:	ACI 318,ASTM C890	LOADING SPEC:	A-16 (AASHTO HS20-44)
AGENCY:		AGENCY SPEC:	

JENSEN PRECAST EST. 1968

WWW.JENSENPRECAST.COM

©2023 Jensen Precast- All rights reserved.
All materials appearing as Jensen Precast documents and the like are proprietary work product and are protected under U.S. copyright and other laws.
Unless in conjunction with business conducted with Jensen Precast, any use of Jensen Precast work product without express, written consent is prohibited, and recipient is prohibited from distributing any and all work product to non-approved third parties under penalty of civil action.

DESCRIPTION:	Drainage 3636x36 Layout Assembly 36"x36"C LAYOUT DRAWING		REV: A-5
PART NUMBER:	200074084	DRAWN BY:	C. Flores
CREATED:	3/23/2023	MODIFIED:	3/29/2023
			SHEET: 2 OF 2

200074084.idw