NOTES
■ FOR COMPLETE DESIGN AND PRODUCT INFORMATION CONTACT JENSEN PRECAST.

BILL OF MATERIALS

ITEM	QTY	PART NUMBER	DESCRIPTION
1	1	100001085	Drainage 2436x48 Rect. Bottom Section Knockout
2	AS REQUIRED	100001091	Riser 2436x6 Rect. Riser
3	AS REQUIRED	100001093	Riser 2436x12 Rect. Riser
4	1	100039686	GRATE FRAME 2436 STEEL GALV EZ FV-1-2436-R1G DL
5	1	100039687	GRATE 2436 STEEL TRF GALV FV-1-2436-02G DL

200073986.idw

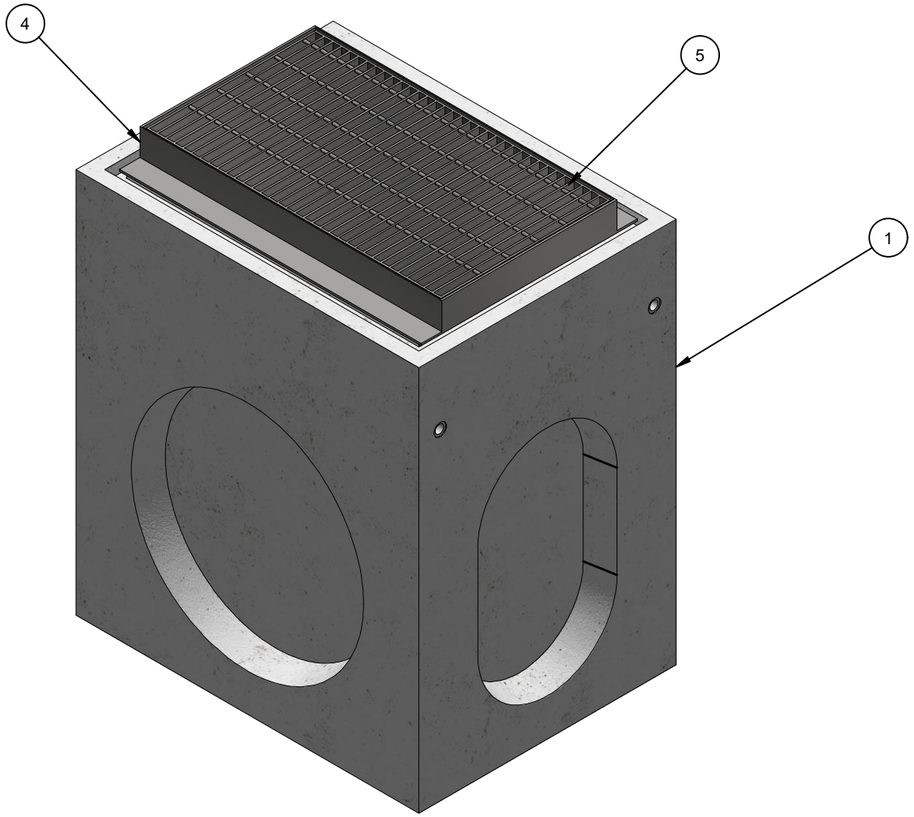

ISO VIEW

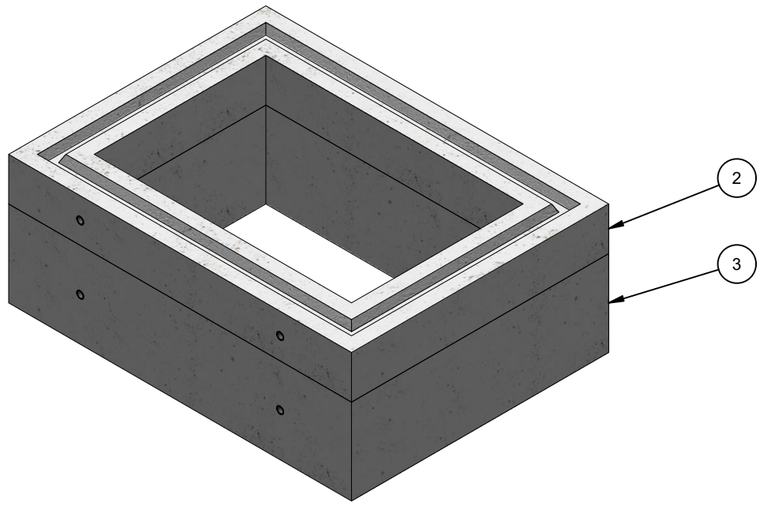

OPTIONAL RISERS

CHANGE HISTORY			
NO.	DESCRIPTION	DATE	BY
1	PRELIMINARY SUBMITTAL 2209-54161-9	2/21/23	CF
2			
3			

BURY DEPTH:	0.0' - 3.8' to Top		
WATER LEVEL:	5.0'	APPROX. WEIGHT:	5204.01 Lbs
DESIGN SPEC:	ACI 318,ASTM C890	LOADING SPEC:	A-16 (AASHTO HS20-44)
AGENCY:		AGENCY SPEC:	

JENSEN PRECAST EST. 1968

WWW.JENSENPRECAST.COM

©2023 Jensen Precast- All rights reserved.
All materials appearing as Jensen Precast documents and the like are proprietary work product and are protected under U.S. copyright and other laws.
Unless in conjunction with business conducted with Jensen Precast, any use of Jensen Precast work product without express, written consent is prohibited, and recipient is prohibited from distributing any and all work product to non-approved third parties under penalty of civil action.

DESCRIPTION:	Drainage 2436x48 Layout Assembly 24"x36"C LAYOUT REVIEW		REV: A-3
PART NUMBER:	200073986	DRAWN BY:	C. Flores
CREATED:	3/20/2023	MODIFIED:	3/28/2023
			SHEET: 1 OF 2

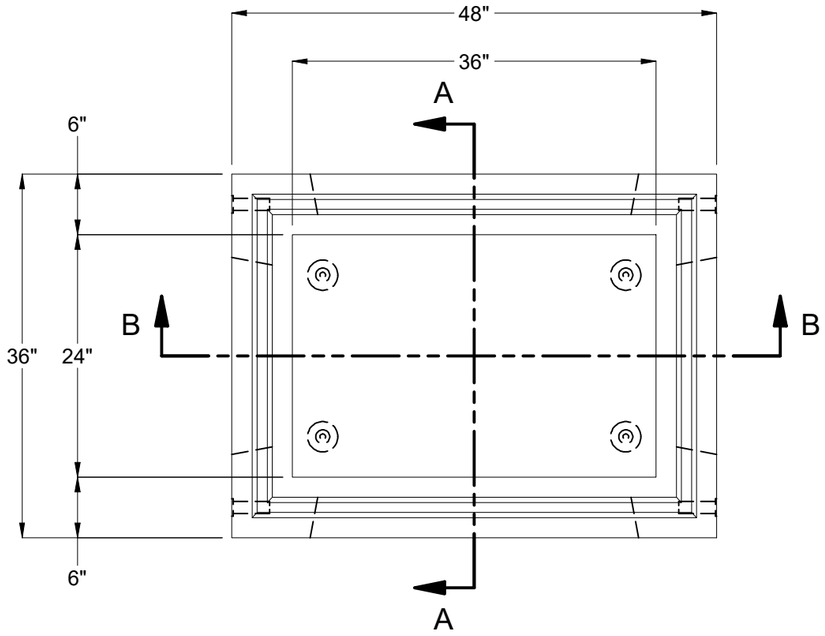

PLAN VIEW

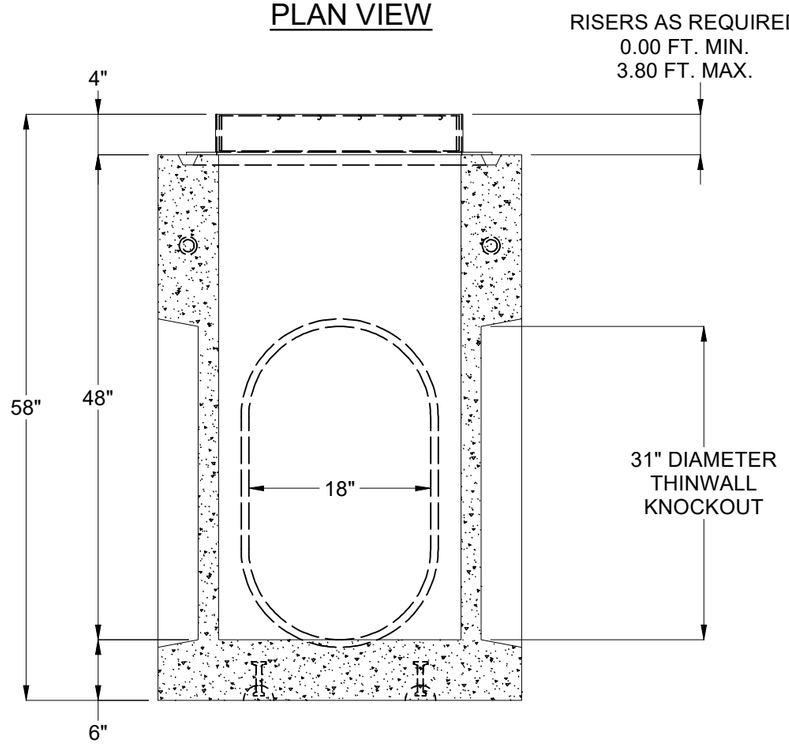

SECTION A-A

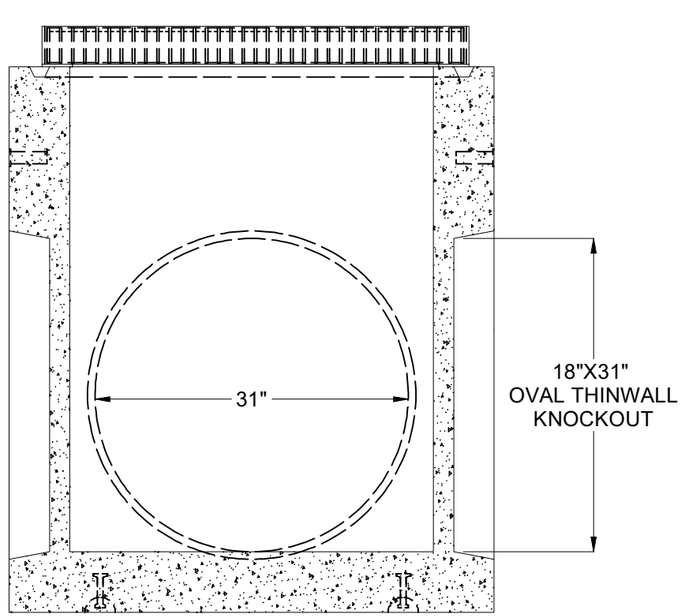

SECTION B-B

BURY DEPTH:	0.0' - 3.8' to Top		
WATER LEVEL:	5.0'	APPROX. WEIGHT:	5204.01 Lbs
DESIGN SPEC:	ACI 318,ASTM C890	LOADING SPEC:	A-16 (AASHTO HS20-44)
AGENCY:		AGENCY SPEC:	

JENSEN PRECAST EST. 1968

WWW.JENSENPRECAST.COM

©2023 Jensen Precast- All rights reserved.
All materials appearing as Jensen Precast documents and the like are proprietary work product and are protected under U.S. copyright and other laws.
Unless in conjunction with business conducted with Jensen Precast, any use of Jensen Precast work product without express, written consent is prohibited, and recipient is prohibited from distributing any and all work product to non-approved third parties under penalty of civil action.

DESCRIPTION:	Drainage 2436x48 Layout Assembly 24"x36"C LAYOUT DRAWING		REV: A-3
PART NUMBER:	200073986	DRAWN BY:	C. Flores
CREATED:	3/20/2023	MODIFIED:	3/28/2023
			SHEET: 2 OF 2

200073986.idw