DESIGN NOTES
■ FOR COMPLETE DESIGN AND PRODUCT INFORMATION CONTACT JENSEN PRECAST.

BILL OF MATERIALS

ITEM	QTY	PART NUMBER	DESCRIPTION	MASS
1	1	100001523	Sample Box D2432x15 Rnd. Bottom Section Boot	903.761 lbmass
2	1	100009384	CI RING 24DIA X 4H B-5105 ASTM A48 CL35B	200.000 lbmass
3	1	100005761	CI COVER 24DIA B-5105-02 ASTM A48 CL35B CP W/GASKET JENSEN/INTERCEPTOR	110.509 lbmass
4	AS REQUIRED	100001526	Grade Ring D2432x12	365.176 lbmass
5	AS REQUIRED	100001525	Grade Ring D2432x6	179.194 lbmass
6	AS REQUIRED	100001524	Grade Ring D2432x3	88.966 lbmass

200073963.idw

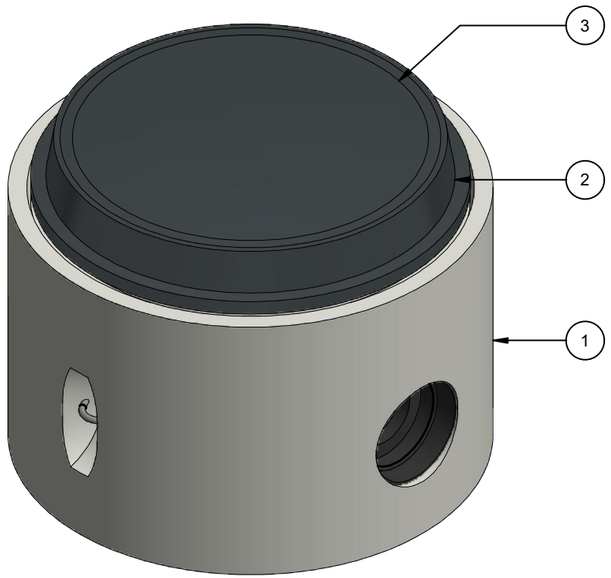

ISO VIEW

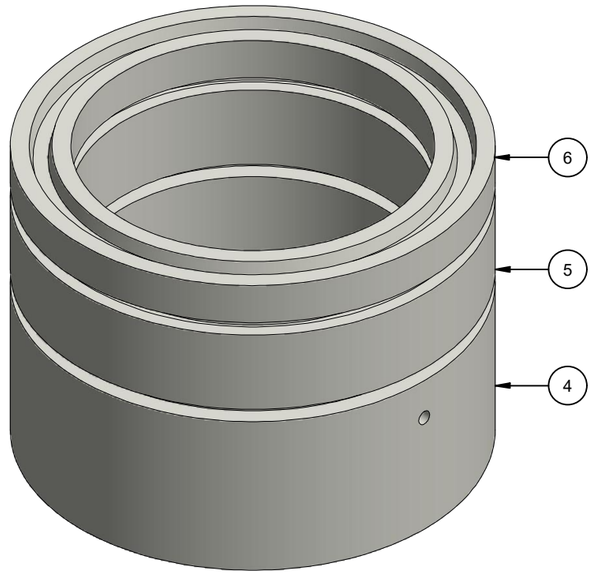

ISO VIEW
OPTIONAL GRADE RINGS
NOT TO EXCEED 28'-9" TO
TOP OF BASE WALL

CHANGE HISTORY			
NO.	DESCRIPTION	DATE	BY
1	2208-54161-17 PACKAGE PART SV200-H	3/20/2023	EDC
2			
3			

BURY DEPTH:	0.0' - 0.0' to Top		
WATER LEVEL:	Below Structure	APPROX. WEIGHT:	1847.61 Lbs
DESIGN SPEC:	ASTM C478,ASTM C890	LOADING SPEC:	A-16 (AASHTO HS20-44)
AGENCY:		AGENCY SPEC:	

JENSEN PRECAST EST. 1968

WWW.JENSENPRECAST.COM

©2023 Jensen Precast- All rights reserved.
All materials appearing as Jensen Precast documents and the like are proprietary work product and are protected under U.S. copyright and other laws.
Unless in conjunction with business conducted with Jensen Precast, any use of Jensen Precast work product without express, written consent is prohibited, and recipient is prohibited from distributing any and all work product to non-approved third parties under penalty of civil action.

DESCRIPTION:	D2432 Sample Box Model EV200-H LAYOUT REVIEW		REV: A-1
PART NUMBER:	200073963	DRAWN BY:	E CAMERON
CREATED:	3/20/2023	MODIFIED:	4/20/2023
			SHEET: 1 OF 2

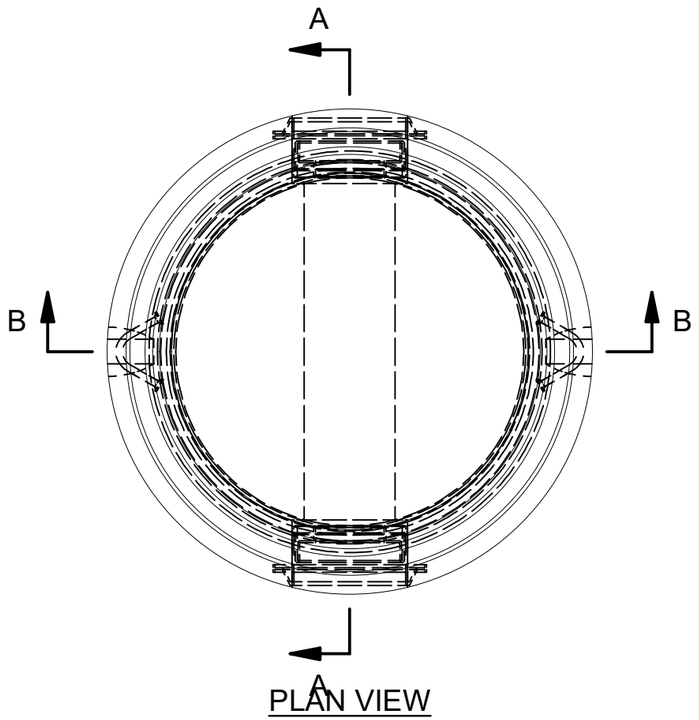

PLAN VIEW

MIN. 0'-4"
TO
28'-9" MAX.

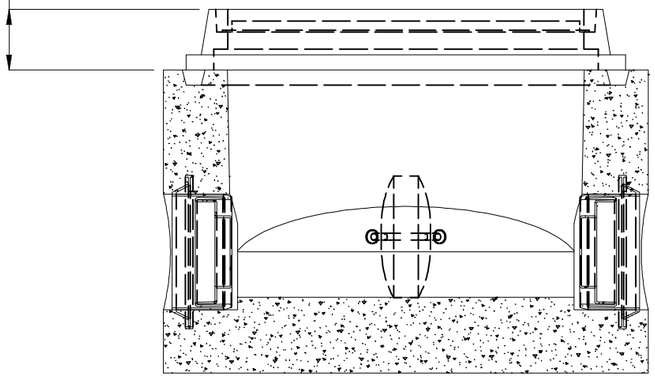

SECTION A-A

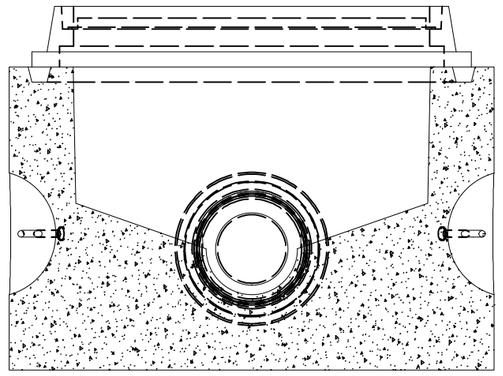

SECTION B-B

BURY DEPTH:	0.0' - 0.0' to Top		
WATER LEVEL:	Below Structure	APPROX. WEIGHT:	1847.61 Lbs
DESIGN SPEC:	ASTM C478,ASTM C890	LOADING SPEC:	A-16 (AASHTO HS20-44)
AGENCY:		AGENCY SPEC:	

JENSEN PRECAST EST. 1968

WWW.JENSENPRECAST.COM

©2023 Jensen Precast- All rights reserved.
All materials appearing as Jensen Precast documents and the like are proprietary work product and are protected under U.S. copyright and other laws.
Unless in conjunction with business conducted with Jensen Precast, any use of Jensen Precast work product without express, written consent is prohibited, and recipient is prohibited from distributing any and all work product to non-approved third parties under penalty of civil action.

DESCRIPTION:	D2432 Sample Box Model EV200-H LAYOUT DRAWING		REV: A-1
PART NUMBER:	200073963	DRAWN BY:	E CAMERON
CREATED:	3/20/2023	MODIFIED:	4/20/2023
			SHEET: 2 OF 2

200073963.idw