NOTES
■ CONCRETE MIX USED IN POURING THIS PRODUCT SHALL USE FLY ASH AS AN ADMIXTURE.
■ ALL PARTS TO BE STENCILED: MFG DATE / JOB NUMBER / PRODUCT ID / WEIGHT.

CITY OF LOS ANGELES INSPECTION
REQUIRED U PERMIT# 2021006418

NORTH HOLLYWOOD
DO5988-C-043

BILL OF MATERIALS

ITEM	UNIT QTY	QTY	PART NUMBER	DESCRIPTION
1	23.938 ft^3	23.938 ft^3	100006026	CONCRETE 5500 PSI DCI & FLY ASH LADWP MIX #30
2	1	3	100002874	ANCHOR DOGBONE P52 4T X 4-3/4" GALV
3	1	1	300152512	REINFORCING MAT 300152512

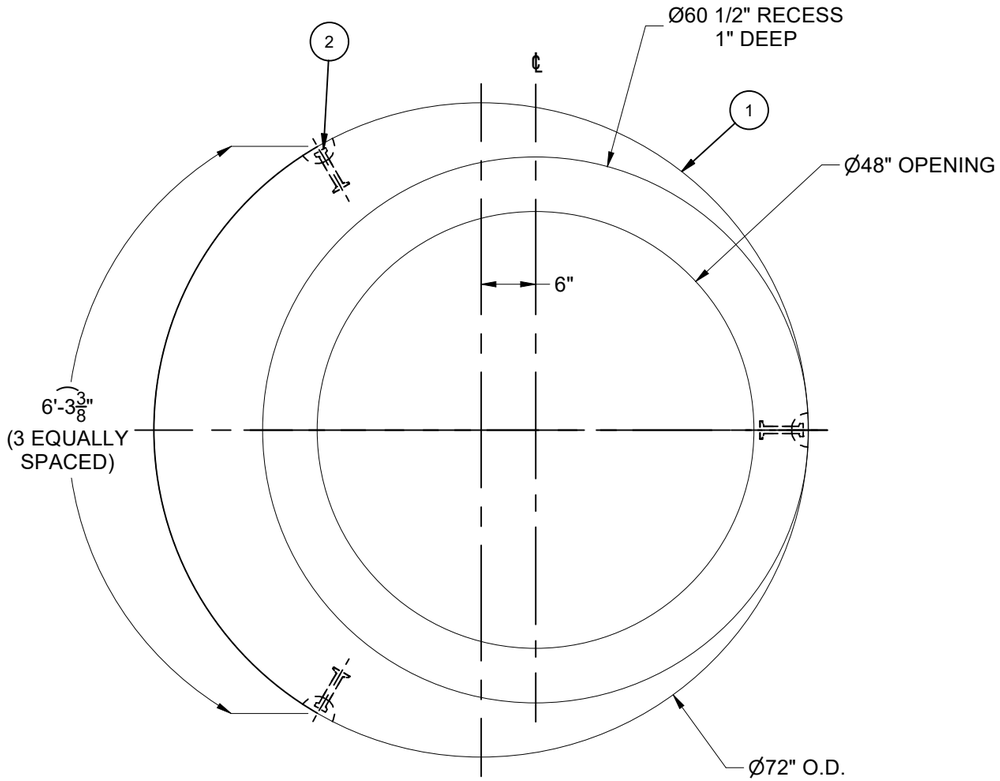

PLAN VIEW

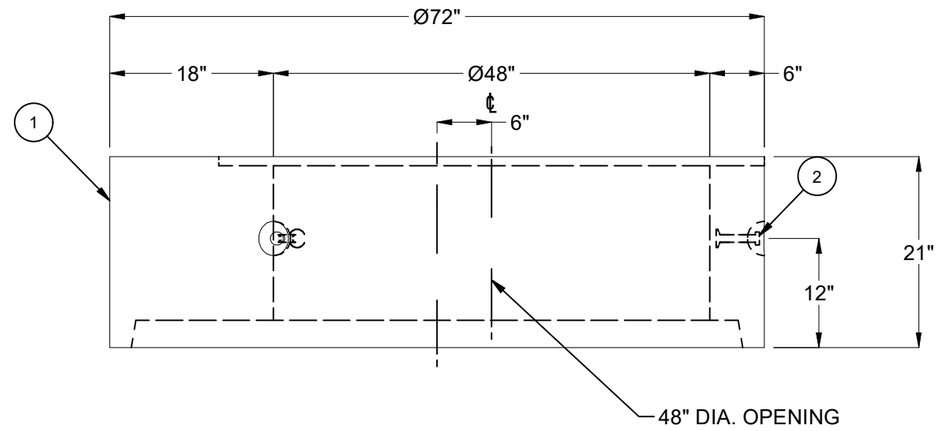

SIDE ELEVATION

LIFTING NOTES
■ DEMOLDING: THIS CONCRETE PRODUCT IS DESIGNED TO BE LIFTED AT 2,500 PSI WITH 3 LIFT CONNECTIONS EQUALLY LOADED TO 3 LIFTING POINTS AT A MINIMUM 90° SLING ANGLE, MEASURED FROM HORIZONTAL.
■ INSTALLATION: THIS CONCRETE PRODUCT IS DESIGNED TO BE LIFTED AT 5,500 PSI WITH 3 LIFT CONNECTIONS EQUALLY LOADED TO 3 LIFTING POINTS AT A MINIMUM 90° SLING ANGLE, MEASURED FROM HORIZONTAL.

BURY DEPTH:	0.0' - 2.0' to Top		
WATER LEVEL:	50.0'	APPROX. WEIGHT:	3600.6 Lbs
DESIGN SPEC:	ACI 318,ASTM C478	LOADING SPEC:	AASHTO HL-93
REINFORCEMENT TYPE:	Rebar	LIFTING TYPE:	Dogbone

JENSEN PRECAST EST. 1968
WWW.JENSENPRECAST.COM

©2023 Jensen Precast- All rights reserved.
All materials appearing as Jensen Precast documents and the like are proprietary work product and are protected under U.S. copyright and other laws.
Unless in conjunction with business conducted with Jensen Precast, any use of Jensen Precast work product without express, written consent is prohibited, and recipient is prohibited from distributing any and all work product to non-approved third parties under penalty of civil action.

REVISION HISTORY

REV	DESCRIPTION	DATE	APPROVED
A-2	IINITIAL RELEASE	3/23/2023	

DESCRIPTION:	Manhole D6072x21 Flat Top 48"E LADWP COLA CASTING LAYOUT		REV: A-2
PART NUMBER:	200073937	DRAWN BY: D. Mejia	SHEET: 1 OF 1
CREATED:	3/17/2023	MODIFIED: 3/23/2023	

200073937.idw