NOTES
■ FOR COMPLETE DESIGN AND PRODUCT INFORMATION CONTACT JENSEN PRECAST.

BILL OF MATERIALS

ITEM	QTY	PART NUMBER	DESCRIPTION
1	20.100 ft^3	100002728	CONCRETE MIX GENERIC 4000 PSI
2	2	100002854	INSERT MH RUNG PLASTIC SP SOCKET
3	1	100035946	REINF HOOP STEEL .309DIA GA ASTM A-1064 29DIA
4	1	100041973	REINF HOOP STEEL .309DIA GA ASTM A-1064 48DIA
5	1	100002393	REINF HOOP STEEL .309DIA GA ASTM A-1064 67.5DIA

200073906.idw

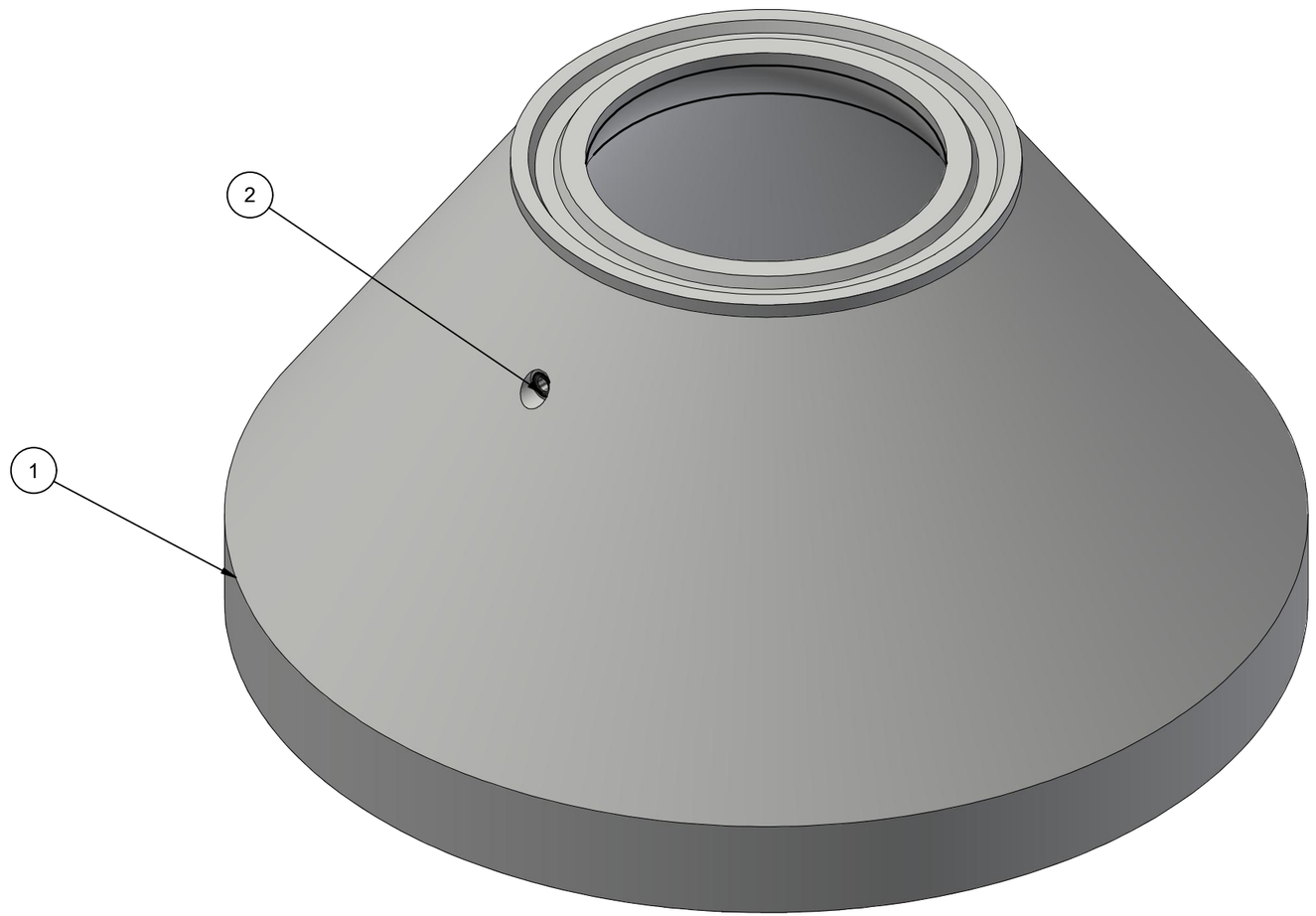

ISOMETRIC

LIFTING NOTES
■ THIS CONCRETE PRODUCT IS DESIGNED TO BE LIFTED AT 3000 PSI WITH 2 LIFT CONNECTIONS EQUALLY LOADED TO 2 LIFTING POINTS AT A MINIMUM 45°, MAXIMUM 90° SLING ANGLE, MEASURED FROM HORIZONTAL.

BURY DEPTH:	0.0' - 2.0' to Top		
WATER LEVEL:	0.0'	WEIGHT:	3035.88 Lbs
DESIGN SPEC:	ASTM C478	LOADING SPEC:	A-16 (AASHTO HS20-44)
REINFORCEMENT TYPE:	Plain Wire	LIFTING TYPE:	SP Socket

JENSEN PRECAST EST. 1968

WWW.JENSENPRECAST.COM

©2023 Jensen Precast- All rights reserved.
All materials appearing as Jensen Precast documents and the like are proprietary work product and are protected under U.S. copyright and other laws.
Unless in conjunction with business conducted with Jensen Precast, any use of Jensen Precast work product without express, written consent is prohibited, and recipient is prohibited from distributing any and all work product to non-approved third parties under penalty of civil action.

REVISION HISTORY

REV	DESCRIPTION	DATE	BY
A	INITIAL RELEASE	07/30/2020	

DESCRIPTION: Manhole Cone Concentric D6072 to D24x36IN TU

CASTING LAYOUT

REV: A-1

PART NUMBER:	200073906	DRAWN BY:	A. Sprung
CREATED:	9/23/2020	MODIFIED:	3/17/2023

SHEET: 1 OF 2

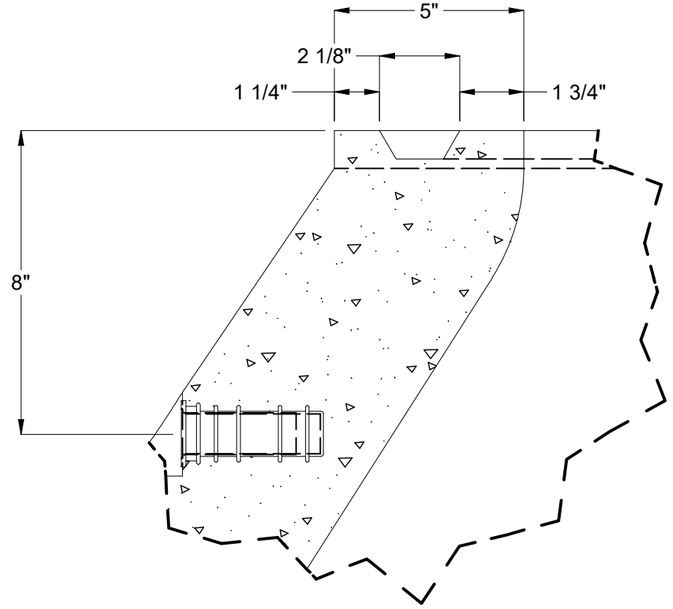

DETAIL B

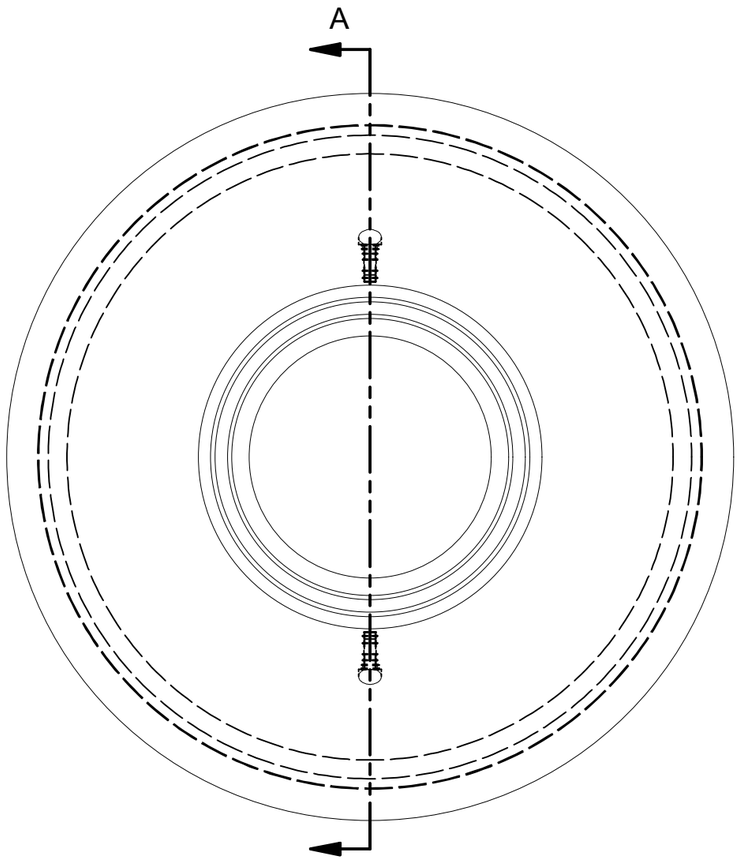

PLAN VIEW

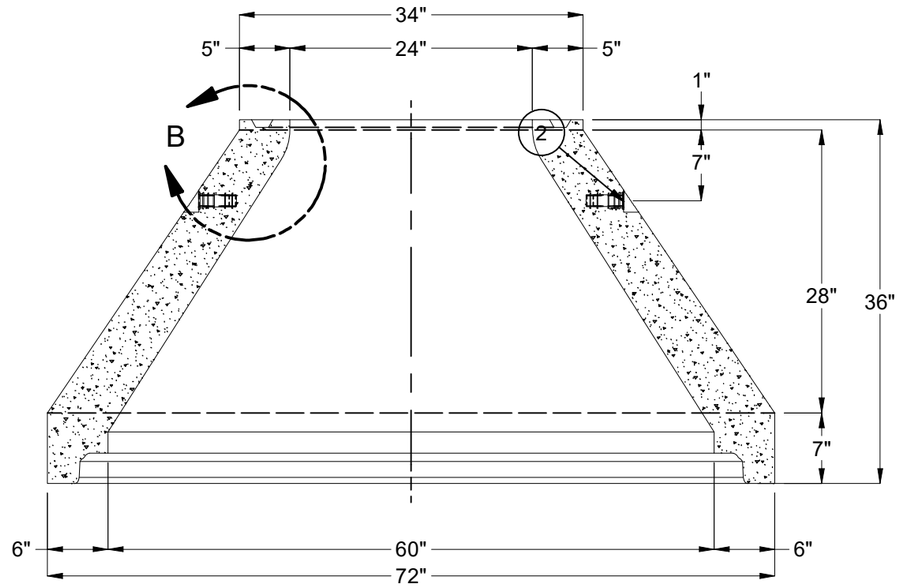

SECTION A-A

BURY DEPTH:	0.0' - 2.0' to Top		
WATER LEVEL:	0.0'	WEIGHT:	3035.88 Lbs
DESIGN SPEC:	ASTM C478	LOADING SPEC:	A-16 (AASHTO HS20-44)
REINFORCEMENT TYPE:	Plain Wire	LIFTING TYPE:	SP Socket

JENSEN PRECAST EST. 1968

WWW.JENSENPRECAST.COM

©2023 Jensen Precast- All rights reserved.
All materials appearing as Jensen Precast documents and the like are proprietary work product and are protected under U.S. copyright and other laws.
Unless in conjunction with business conducted with Jensen Precast, any use of Jensen Precast work product without express, written consent is prohibited, and recipient is prohibited from distributing any and all work product to non-approved third parties under penalty of civil action.

DESCRIPTION:	Manhole Cone Concentric D6072 to D24x36IN TU CASTING DRAWING		REV: A-1
PART NUMBER:	200073906	DRAWN BY:	A. Sprung
CREATED:	9/23/2020	MODIFIED:	3/17/2023
			SHEET: 2 OF 2

200073906.idw