NOTES
■ "GRD" STENCILED IN RED LETTERS (1 1/2" MIN. - 2" MAX.)
■ ALL PARTS TO BE STENCILED: MFG DATE / JOB NUMBER / PRODUCT ID / WEIGHT.

BILL OF MATERIALS

ITEM	UNIT QTY	QTY	PART NUMBER	DESCRIPTION
1	154.886 ft^3	154.886 ft^3	100024079	CONCRETE #19 MOD SCC
2	1	4	100002882	ANCHOR DOGBONE P52 8T X 13-3/8" GALV
3	1	16	100005936	TERMINATOR DUCT WITH SEAL 5IN T5001
4	1	1	100008247	INSERT COIL THIN SLAB DOUBLE 4LEG 1 X 5 GALV CX-48
5	1	2	100005912	PULL IRON OFFSET .875DIA 3.375 IH X 12.125L X 6.5W GALV
6	1	2	100005932	INSERT GROUND BRONZE BOTTLE ROCKET 1/2-13 UNC WITH 11IN COPPER ROD 12H69
7	1	4	100015105	INSERT 1/2IN PLASTIC PENNSYLVANIA STICK-ON
8	1	1	100006105	STRUT C-CHANNEL CONCRETE INSERT 1-5/8 X 1-5/8 W/ANCHORS N-3200 70IN
9	1	3	100006113	STRUT C-CHANNEL CONCRETE INSERT 1-5/8 X 1-5/8 12GA W/ANCHORS N-3200 106IN GALV
10	1	1	300152860	REINFORCING MAT 300152860

200073611.idw

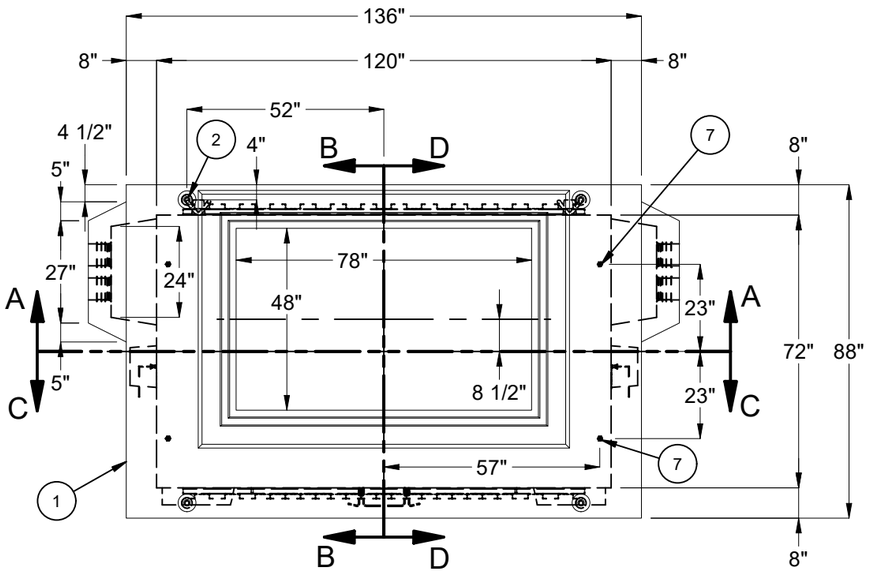

PLAN VIEW

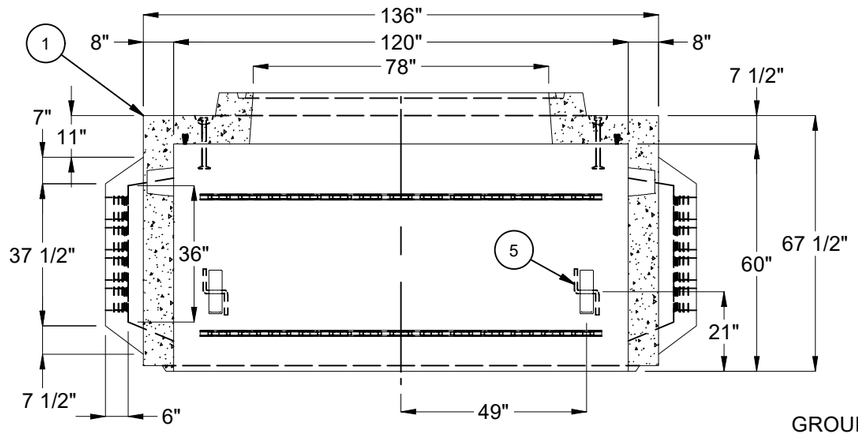

SECTION A-A

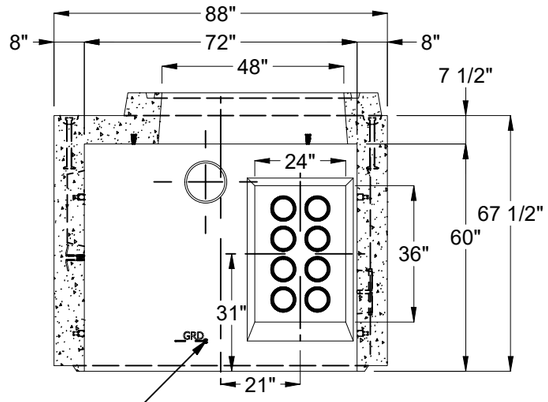

GROUND INSERTS TO BE BRAZED TO REBAR CAGE

SECTION B-B

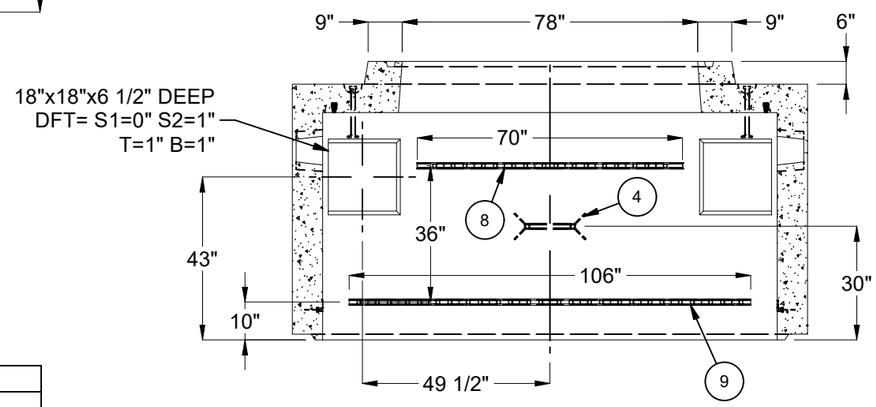

SECTION C-C

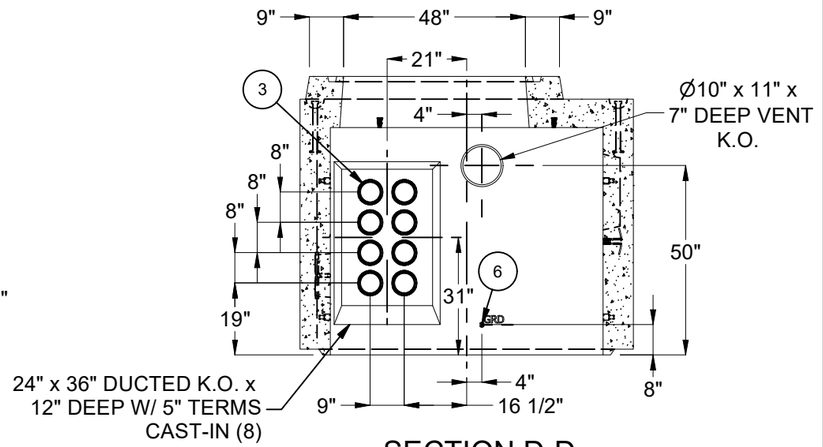

SECTION D-D

LIFTING NOTES
■ DEMOLDING: THIS CONCRETE PRODUCT IS DESIGNED TO BE LIFTED AT 2,500 PSI WITH 4 LIFT CONNECTIONS EQUALLY LOADED TO 4 LIFTING POINTS AT A MINIMUM 90° SLING ANGLE, MEASURED FROM HORIZONTAL.
■ INSTALLATION: THIS CONCRETE PRODUCT IS DESIGNED TO BE LIFTED AT 5,500 PSI WITH 4 LIFT CONNECTIONS EQUALLY LOADED TO 4 LIFTING POINTS AT A MINIMUM 90° SLING ANGLE, MEASURED FROM HORIZONTAL.

BURY DEPTH:	1.5' - 4.0' to Top		
WATER LEVEL:	3.0'	APPROX. WEIGHT:	23376.37 Lbs
DESIGN SPEC:	ACI 318,ASTM C857	LOADING SPEC:	A-16 (AASHTO HS20-44)
REINFORCEMENT TYPE:	Rebar	LIFTING TYPE:	Dogbone

JENSEN PRECAST EST. 1968

WWW.JENSENPRECAST.COM

©2023 Jensen Precast- All rights reserved.
All materials appearing as Jensen Precast documents and the like are proprietary work product and are protected under U.S. copyright and other laws.
Unless in conjunction with business conducted with Jensen Precast, any use of Jensen Precast work product without express, written consent is prohibited, and recipient is prohibited from distributing any and all work product to non-approved third parties under penalty of civil action.

REVISION HISTORY			
REV	DESCRIPTION	DATE	APPROVED
B-1	REVIESED DOGBONE LOCATION	6/20/2023	

DESCRIPTION: Vault 72120x60 Rect. Top Section 48"x78"E Terminators Ducted City of Pasadena V-223.2 CASTING LAYOUT			REV: B-1
PART NUMBER:	200073611	DRAWN BY:	J. Prado
CREATED:	3/13/2023	MODIFIED:	6/20/2023
			SHEET: 1 OF 1