DESIGN NOTES:

- CONCRETE SHALL HAVE A 28 DAY MINIMUM COMPRESSIVE STRENGTH OF 5000 PSI
- SOIL UNIT WEIGHT DRY - 110 lbs/cu.ft.
- EQUIVALENT LATERAL PRESSURE DRY - 40 lbs/cu.ft.
- SOIL UNIT WEIGHT WET - 120 lbs/cu.ft.
- EQUIVALENT LATERAL PRESSURE WET - 80 lbs/cu.ft.

PRODUCTION NOTES:

- LIFTING INSERTS SHALL BE INSTALLED PER MANUFACTURER'S REQUIREMENTS
- APPLIED FINISH - BROOMED
- INTERNAL LINER/COATING - NONE
- EXTERNAL LINER/COATING - NONE

BILL OF MATERIALS

ITEM	QTY	PART NUMBER	DESCRIPTION	MASS
1	74.702 ft^3	100011425	CONCRETE MIX GENERIC 5000 PSI	11226.510 lbmass
2	1	300152455	REINFORCING MAT 300152455	0.031 lbmass
3	1	300152480	REINFORCING MAT 300152480	0.010 lbmass
4	3	100002874	ANCHOR DOGBONE P52 4T X 4-3/4" GALV	1.031 lbmass
5	1	100041984	CI RING 23DIA B-5343-R2 ASTM A-48 CL35B 4-FLANGE DOWN	219.697 lbmass

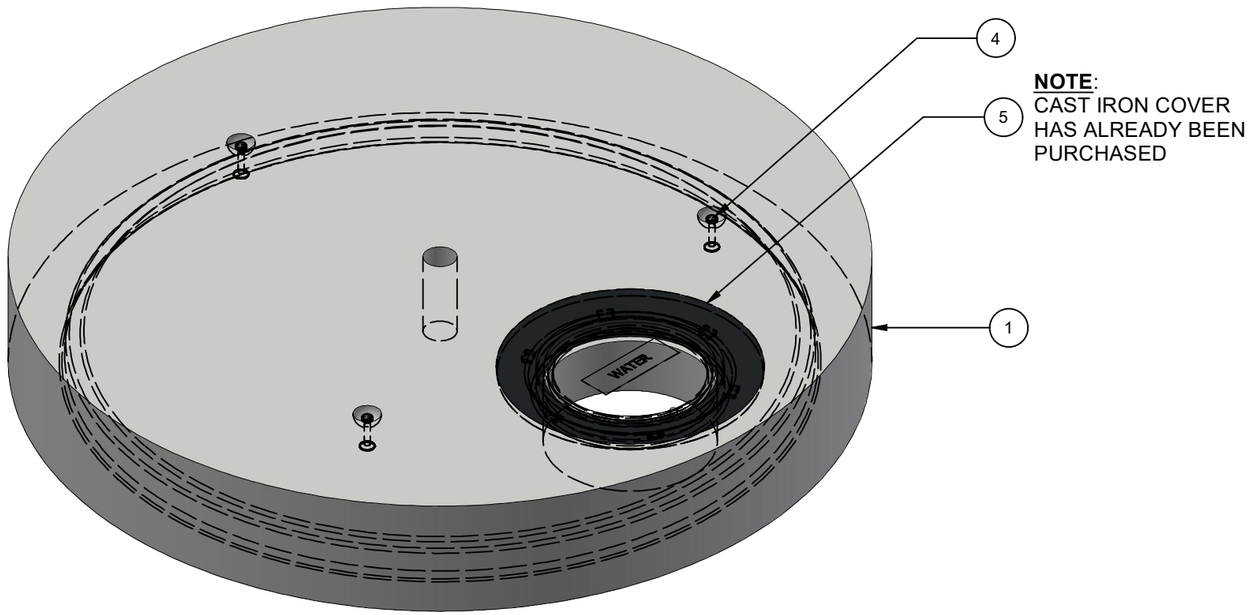

NOTE:
CAST IRON COVER HAS ALREADY BEEN PURCHASED

ISO VIEW

LIFTING NOTES
■ THIS CONCRETE PRODUCT IS DESIGNED TO BE LIFTED AT 2500 PSI WITH 3 LIFT CONNECTIONS EQUALLY LOADED TO 3 LIFTING POINTS AT A MINIMUM 60° SLING ANGLE, MEASURED FROM HORIZONTAL.
*All rigging shall be design by a qualified professional. Loading diagrams show illustrations of possible rigging setups to achieve the required sling angle and load leg equalization. Other valid rigging configurations are possible. A qualified professional must be consulted prior to lifting.

RIGGING DIAGRAM* | A

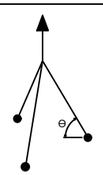

BURY DEPTH:	0.0' - 0.0' to Top		
WATER LEVEL:	Below Structure	APPROX. WEIGHT:	11449.34 Lbs
DESIGN SPEC:	ACI 318,ASTM C890	LOADING SPEC:	A-16 (AASHTO HS20-44)
REINFORCEMENT TYPE:	Rebar	LIFTING TYPE:	Dogbone

JENSEN PRECAST EST. 1968

WWW.JENSENPRECAST.COM

©2024 Jensen Precast- All rights reserved.
All materials appearing as Jensen Precast documents and the like are proprietary work product and are protected under U.S. copyright and other laws.
Unless in conjunction with business conducted with Jensen Precast, any use of Jensen Precast work product without express, written consent is prohibited, and recipient is prohibited from distributing any and all work product to non-approved third parties under penalty of civil action.

CHANGE HISTORY

NO.	DESCRIPTION	DATE	BY
1	PRELIMINARY SUBMITTAL	03/08/2023	EDC
2	REVISED PER CLIENT - REBUILD DUE TO SITE DAMAGE	03/06/2024	EDC
3			

DESCRIPTION:
Manhole D96114x17 Flat Top TU 23"E Cast-In Cover
CASTING LAYOUT

PART NUMBER:	200073317	DRAWN BY:	E CAMERON
CREATED:	3/3/2023	MODIFIED:	3/6/2024

REV: B-1

SHEET: 1 OF 2

200073317.idw

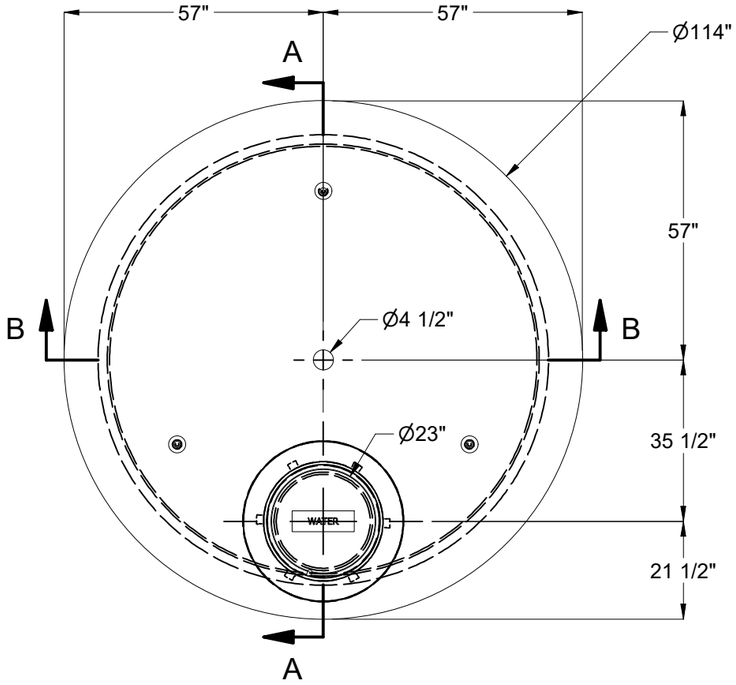

PLAN VIEW
BLOCKOUT LOCATIONS

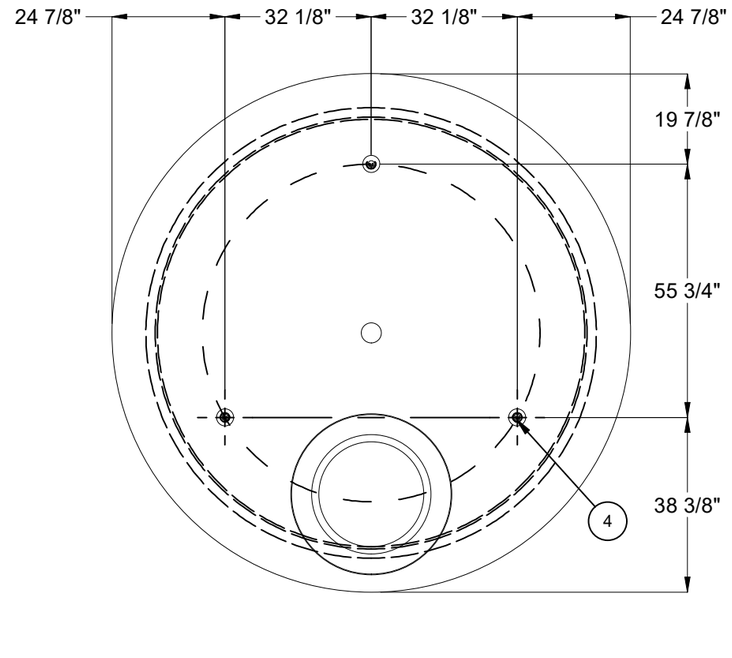

PLAN VIEW
LIFTER LOCATIONS

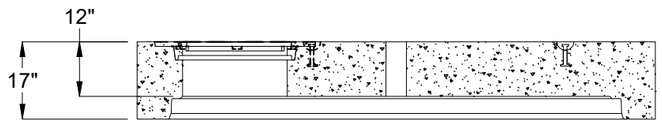

SECTION A-A



SECTION B-B

BURY DEPTH:	0.0' - 0.0' to Top		
WATER LEVEL:	Below Structure	APPROX. WEIGHT:	11449.34 Lbs
DESIGN SPEC:	ACI 318,ASTM C890	LOADING SPEC:	A-16 (AASHTO HS20-44)
REINFORCEMENT TYPE:	Rebar	LIFTING TYPE:	Dogbone

JENSEN PRECAST EST. 1968

WWW.JENSENPRECAST.COM

©2024 Jensen Precast- All rights reserved.
All materials appearing as Jensen Precast documents and the like are proprietary work product and are protected under U.S. copyright and other laws.
Unless in conjunction with business conducted with Jensen Precast, any use of Jensen Precast work product without express, written consent is prohibited, and recipient is prohibited from distributing any and all work product to non-approved third parties under penalty of civil action.

DESCRIPTION:	Manhole D96114x17 Flat Top TU 23"E Cast-In Cover CASTING DRAWING		REV: B-1
PART NUMBER:	200073317	DRAWN BY:	E CAMERON
CREATED:	3/3/2023	MODIFIED:	3/6/2024

SHEET: 2 OF 2

200073317.idw