NOTES
■ FOR COMPLETE DESIGN AND PRODUCT INFORMATION CONTACT JENSEN PRECAST.

BILL OF MATERIALS

ITEM	UNIT QTY	QTY	PART NUMBER	DESCRIPTION
1	1	1	100004623	RCP P30B Bell - Flared 12x60 81L
2	1	1	100002257	RCP PE1930 Horizontal Class 4 Bell - Spigot 96L
3	2.292 ft^3	2.292 ft^3	100011427	CONCRETE MIX GENERIC 6000 PSI
4	8.877 ft^2	8.877 ft^2	100028208	REINF WWR 2Vx8 W7.0 x W3.0 x 87"(+0,+1) x 450' Reg 3WF

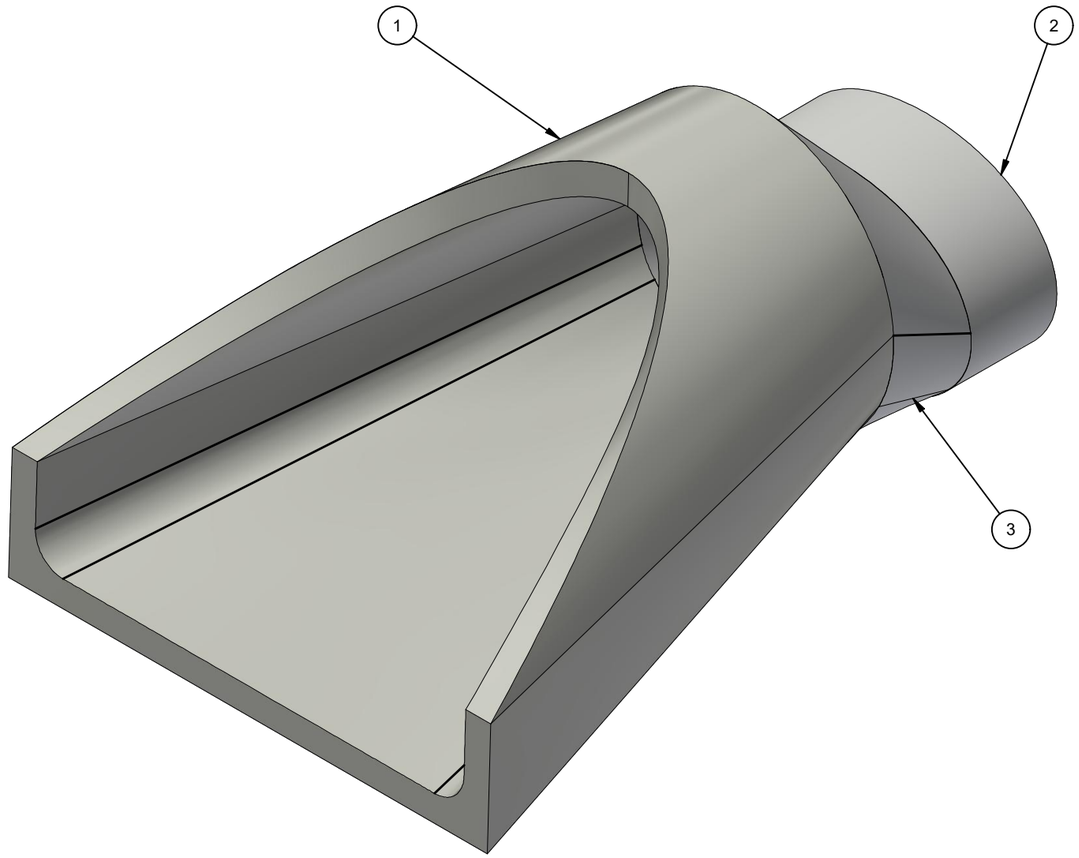

ISO VIEW

200073262.idw

CHANGE HISTORY			
NO.	DESCRIPTION	DATE	BY
1	PRELIMINARY SUBMITTAL - 2302-54879	3/3/2023	MF
2			
3			

BURY DEPTH:	to		
WATER LEVEL:		APPROX. WEIGHT:	2820.3 Lbs
DESIGN SPEC:	ASTM C507	LOADING SPEC:	
REINFORCEMENT TYPE:	WWR Deformed	LIFTING TYPE:	None

JENSEN PRECAST EST. 1968

WWW.JENSENPRECAST.COM

©2023 Jensen Precast- All rights reserved.
All materials appearing as Jensen Precast documents and the like are proprietary work product and are protected under U.S. copyright and other laws.
Unless in conjunction with business conducted with Jensen Precast, any use of Jensen Precast work product without express, written consent is prohibited, and recipient is prohibited from distributing any and all work product to non-approved third parties under penalty of civil action.

DESCRIPTION:	RCP PE1930 Horizontal Bell - Flared 12x60 95L CASTING LAYOUT		
PART NUMBER:	200073262	DRAWN BY:	M. Foster
CREATED:	3/3/2023	MODIFIED:	3/8/2023

REV: A-2

SHEET: 1 OF 2

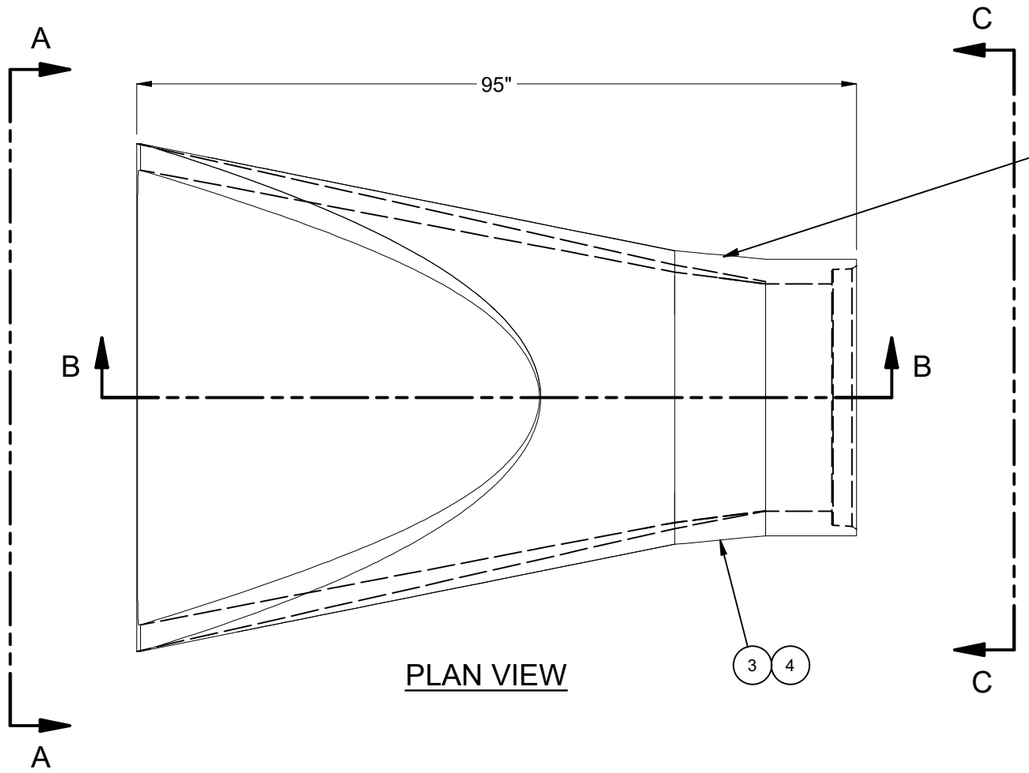

PLAN VIEW

EXPOSE TRANSITIONING END OF PIPE & FLARED SECTION REINFORCING MAT A MINIMUM OF 12".

LAYER WRAP THE EXPOSED WWR WITH THE MINIMUM STEEL AREAS BELOW

As = 0.39 IN^2/FT

SPOT WELD OR TIE WWR AS REQUIRED TO HOLD WWR IN PLACE

BUILD UP COLLAR OF 6000 PSI CONCRETE ON OUTSIDE AND TROWEL SMOOTH INSIDE.

200073262.idw

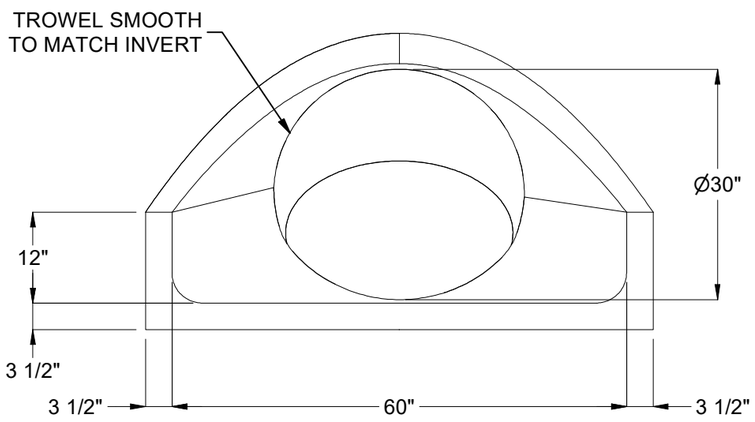

VIEW A-A
FLARED END

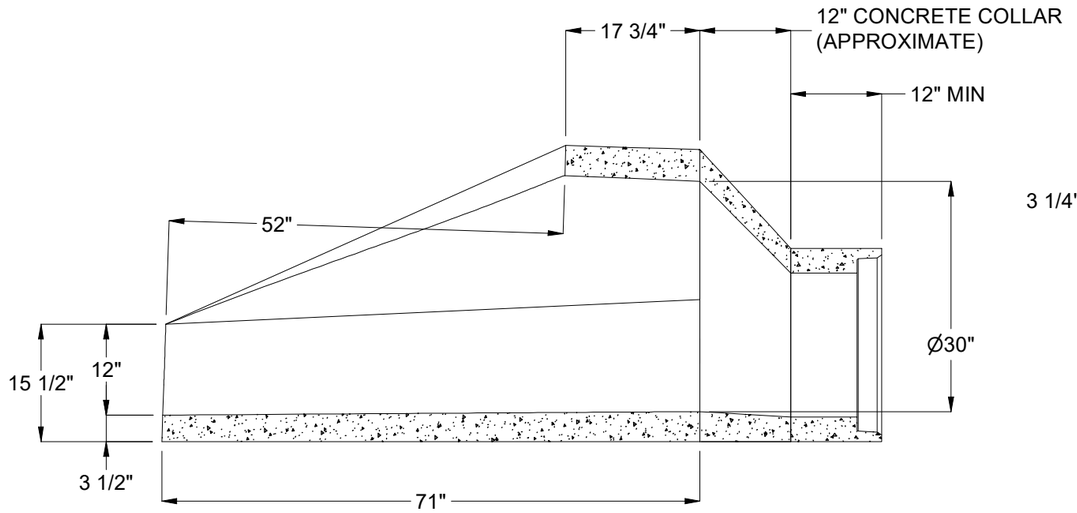

SECTION B-B

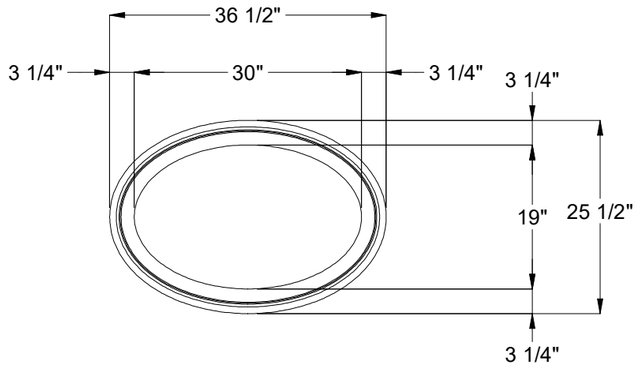

VIEW C-C
RCP END

BURY DEPTH:	to		
WATER LEVEL:		APPROX. WEIGHT:	2820.3 Lbs
DESIGN SPEC:	ASTM C507	LOADING SPEC:	
REINFORCEMENT TYPE:	WWR Deformed	LIFTING TYPE:	None

JENSEN PRECAST EST. 1968

WWW.JENSENPRECAST.COM

©2023 Jensen Precast- All rights reserved.
All materials appearing as Jensen Precast documents and the like are proprietary work product and are protected under U.S. copyright and other laws.
Unless in conjunction with business conducted with Jensen Precast, any use of Jensen Precast work product without express, written consent is prohibited, and recipient is prohibited from distributing any and all work product to non-approved third parties under penalty of civil action.

DESCRIPTION:	RCP PE1930 Horizontal Bell - Flared 12x60 95L CASTING DRAWING		REV: A-2
PART NUMBER:	200073262	DRAWN BY:	M. Foster
CREATED:	3/3/2023	MODIFIED:	3/8/2023
			SHEET: 2 OF 2