NOTES
■ FOR COMPLETE DESIGN AND PRODUCT INFORMATION CONTACT JENSEN PRECAST.
■ OPENINGS NOT PERMISSABLE PER ASTM C478

BILL OF MATERIALS

ITEM	QTY	PART NUMBER	DESCRIPTION
1	17.226 ft^3	100002728	CONCRETE MIX GENERIC 4000 PSI
2	2	100002854	INSERT MH RUNG PLASTIC SP SOCKET
3	6	100003363	REINF HOOP STEEL .25235DIA GA ASTM A-1064 54.25DIA
4	3	100039916	LADDER STEP RUNG POLYMER 9.25 X 13IN ASTM C-478 PS2-PF MA INDUSTRIES

200073070.idw



LIFTING NOTES
■ DEMOLDING & INSTALLATION: THIS CONCRETE PRODUCT IS DESIGNED TO BE LIFTED AT 2500 PSI WITH 2 CONNECTIONS EQUALLY LOADED 2 LIFTING POINTS AT A MINIMUM 45°, MAXIMUM 90° SLING ANGLE, MEASURED FROM HORIZONTAL.

BURY DEPTH:	0.0' - 99.0' to Top		
WATER LEVEL:	0.0'	WEIGHT:	2635.42 Lbs
DESIGN SPEC:	ASTM C478	LOADING SPEC:	A-16 (AASHTO HS20-44)
REINFORCEMENT TYPE:	Plain Wire	LIFTING TYPE:	SP Socket

JENSEN PRECAST EST. 1968

WWW.JENSENPRECAST.COM

©2018 Jensen Precast- All rights reserved.
All materials appearing as Jensen Precast documents and the like are proprietary work product and are protected under U.S. copyright and other laws.
Unless in conjunction with business conducted with Jensen Precast, any use of Jensen Precast work product without express, written consent is prohibited, and recipient is prohibited from distributing any and all work product to non-approved third parties under penalty of civil action.

REVISION HISTORY			
REV	DESCRIPTION	DATE	BY
1	INITIAL RELEASE	2/27/2023	APS

DESCRIPTION: Manhole D4858x36 Barrel TU Cast-In Steps NC CASTING LAYOUT				REV: A-2
PART NUMBER:	200073070	DRAWN BY:	A. Sprung	SHEET: 1 OF 2
CREATED:	12/2/2018	MODIFIED:	2/28/2023	

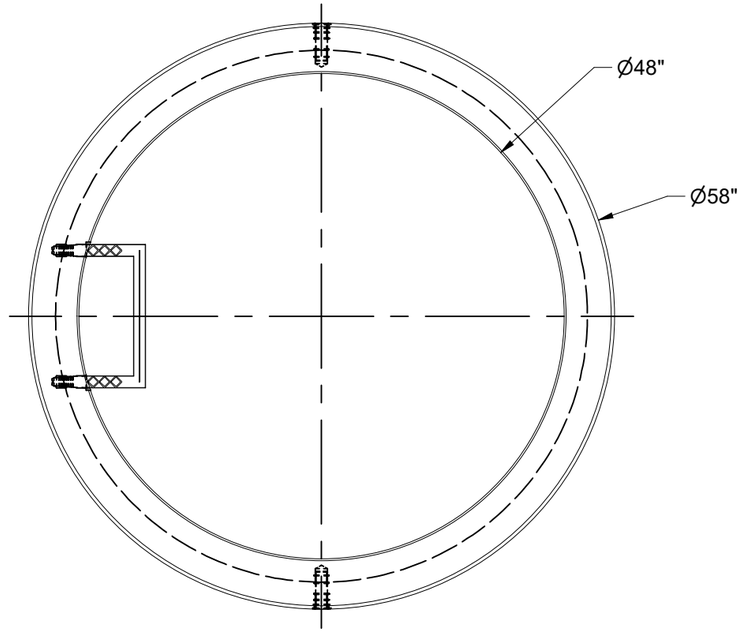

PLAN VIEW

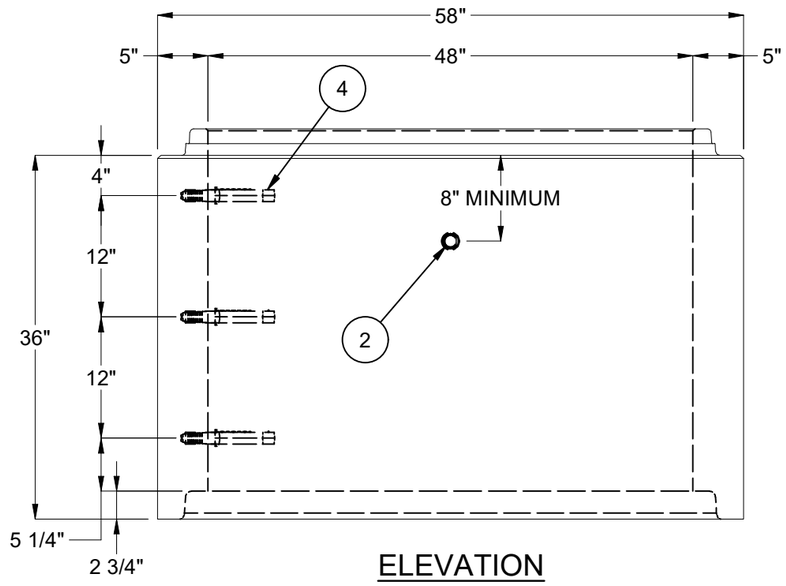

ELEVATION

BURY DEPTH:	0.0' - 99.0' to Top		
WATER LEVEL:	0.0'	WEIGHT:	2635.42 Lbs
DESIGN SPEC:	ASTM C478	LOADING SPEC:	A-16 (AASHTO HS20-44)
REINFORCEMENT TYPE:	Plain Wire	LIFTING TYPE:	SP Socket

JENSEN PRECAST EST. 1968

WWW.JENSENPRECAST.COM

©2018 Jensen Precast- All rights reserved.
All materials appearing as Jensen Precast documents and the like are proprietary work product and are protected under U.S. copyright and other laws.
Unless in conjunction with business conducted with Jensen Precast, any use of Jensen Precast work product without express, written consent is prohibited, and recipient is prohibited from distributing any and all work product to non-approved third parties under penalty of civil action.

DESCRIPTION:	Manhole D4858x36 Barrel TU Cast-In Steps NC CASTING DRAWING		
PART NUMBER:	200073070	DRAWN BY:	A. Sprung
CREATED:	12/2/2018	MODIFIED:	2/28/2023

REV: A-2

SHEET: 2 OF 2

200073070.idw