DESIGN NOTES
■ FOR COMPLETE DESIGN AND PRODUCT INFORMATION CONTACT JENSEN PRECAST.

BILL OF MATERIALS

ITEM	QTY	PART NUMBER	DESCRIPTION	WEIGHT (LBS)
1	1	200056549	Vault 4242x7 Slab Top 12"x28"E Tacoma Power 19451	1150.22
2	1	200051351	Vault 4242x38 Rect. Bottom Section Knockout Sump Tacoma Power 21163	2422.66
3	1	200072730	Riser 4242x4 Tacoma Power 79986	344.32
4	1	200056519	Riser 4242x6 Tacoma Power 39970	519.66
5	1	200056523	Riser 4242x12 Tacoma Power 43252	1045.65

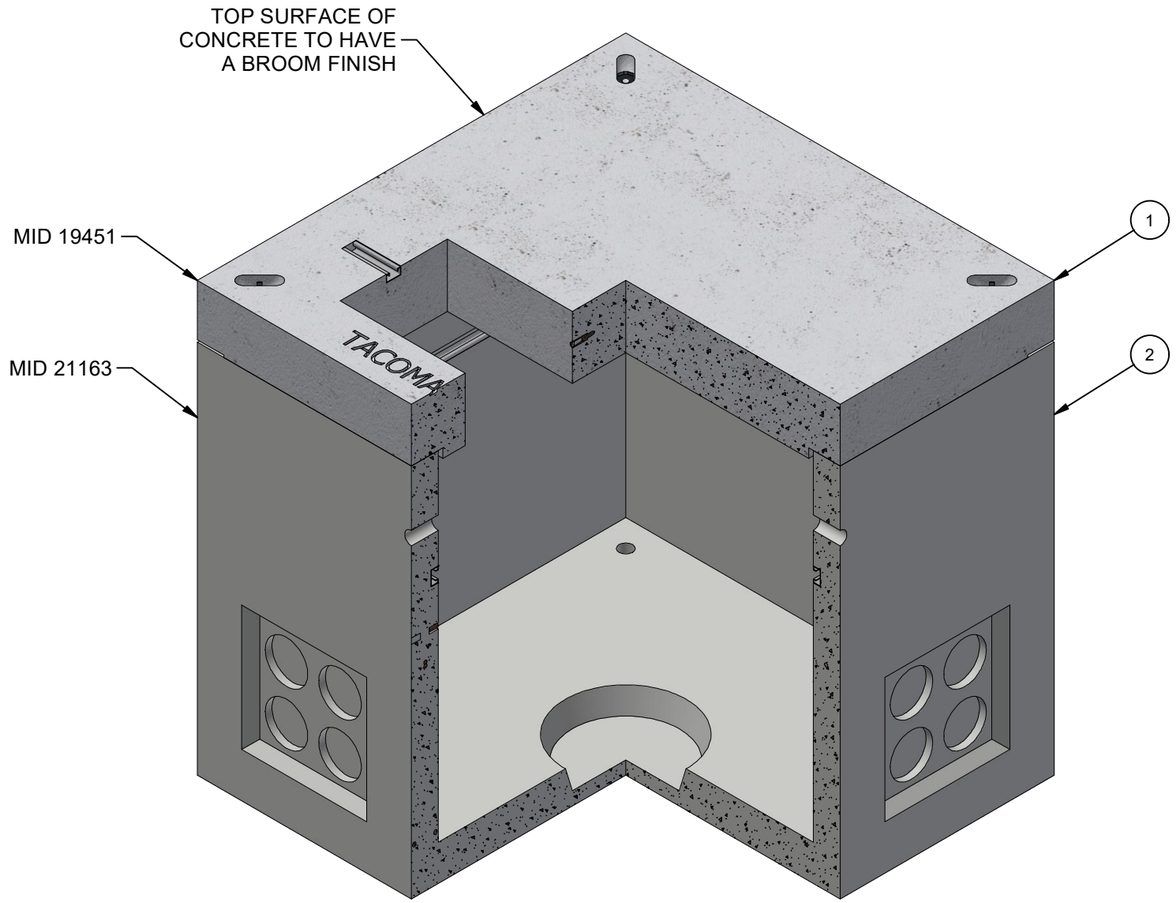

ISO LAYOUT

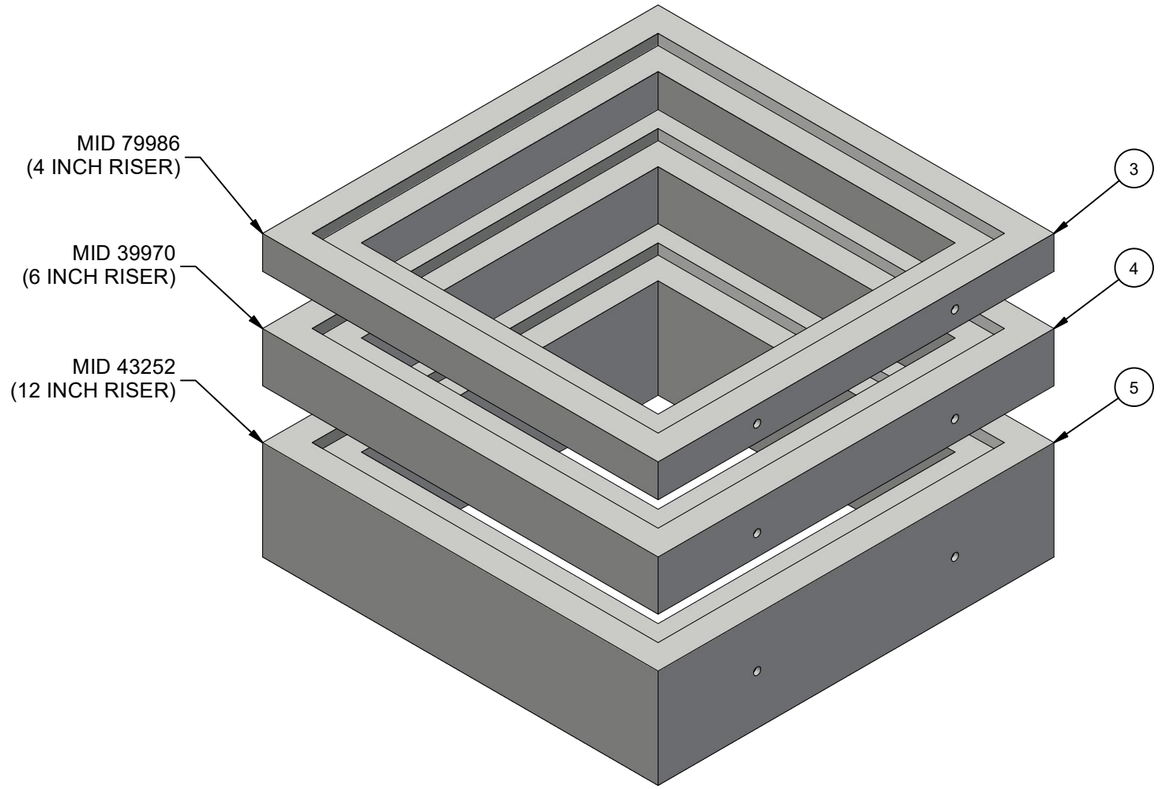

ISO LAYOUT
(SHOWING OPTIONAL RISERS)

200073007.idw

CHANGE HISTORY			
NO.	DESCRIPTION	DATE	BY
A	DRAWING CREATED	4/22/2022	E.Fine
B	RIGGING UPDATED	12/1/2023	E.Fine

BURY DEPTH:	0.0' - 0.0' to Top		
WATER LEVEL:	3.0'	APPROX. WEIGHT:	5480.61 Lbs
DESIGN SPEC:	ACI 318,ASTM C857	LOADING SPEC:	A-16 (AASHTO HS20-44)
AGENCY:	Tacoma Power	AGENCY SPEC:	444

JENSEN PRECAST EST. 1968

WWW.JENSENPRECAST.COM

©2024 Jensen Precast- All rights reserved.
All materials appearing as Jensen Precast documents and the like are proprietary work product and are protected under U.S. copyright and other laws.
Unless in conjunction with business conducted with Jensen Precast, any use of Jensen Precast work product without express, written consent is prohibited, and recipient is prohibited from distributing any and all work product to non-approved third parties under penalty of civil action.

DESCRIPTION:	Vault Layout 4242x37 Terminators Ducted,Sump 12"x28"E Tacoma Power 444 LAYOUT REVIEW		REV: B-2
PART NUMBER:	200073007	DRAWN BY:	E.Fine
CREATED:	9/13/2021	MODIFIED:	1/22/2024
			SHEET: 1 OF 2

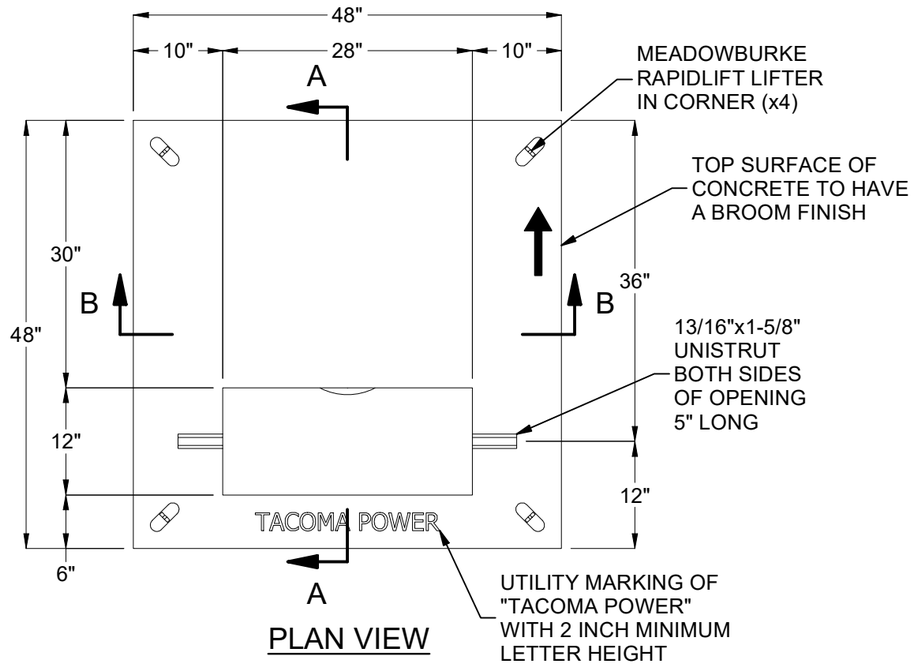

PLAN VIEW

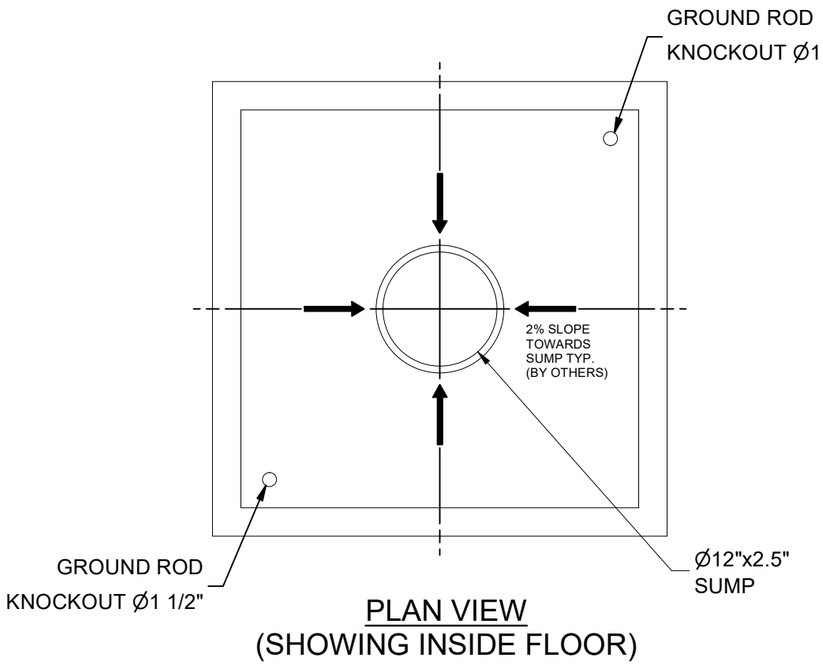

PLAN VIEW
(SHOWING INSIDE FLOOR)

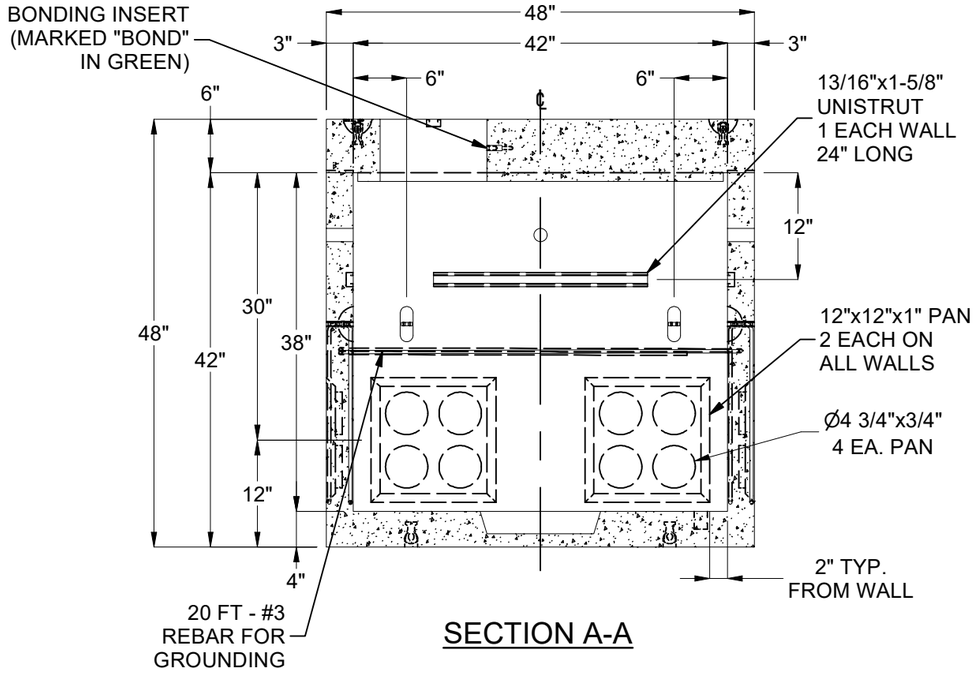

SECTION A-A

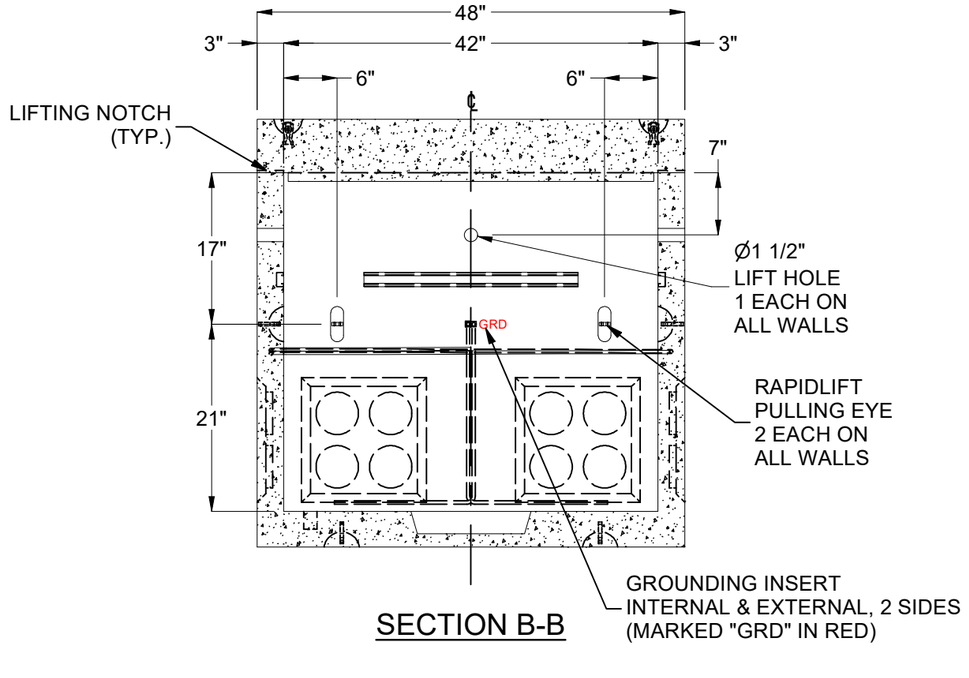

SECTION B-B

BURY DEPTH:	0.0' - 0.0' to Top		
WATER LEVEL:	3.0'	APPROX. WEIGHT:	5480.61 Lbs
DESIGN SPEC:	ACI 318,ASTM C857	LOADING SPEC:	A-16 (AASHTO HS20-44)
AGENCY:	Tacoma Power	AGENCY SPEC:	444

JENSEN PRECAST EST. 1968

WWW.JENSENPRECAST.COM

©2024 Jensen Precast- All rights reserved.
All materials appearing as Jensen Precast documents and the like are proprietary work product and are protected under U.S. copyright and other laws.
Unless in conjunction with business conducted with Jensen Precast, any use of Jensen Precast work product without express, written consent is prohibited, and recipient is prohibited from distributing any and all work product to non-approved third parties under penalty of civil action.

DESCRIPTION:
Vault Layout 4242x37 Terminators Ducted,Sump 12"x28"E Tacoma Power 444
LAYOUT DRAWING

PART NUMBER:	200073007	DRAWN BY:	E.Fine
CREATED:	9/13/2021	MODIFIED:	1/22/2024

REV: B-2

SHEET: 2 OF 2

200073007.idw