DESIGN NOTES
■ FOR COMPLETE DESIGN AND PRODUCT INFORMATION CONTACT JENSEN PRECAST.

BILL OF MATERIALS

ITEM	UNIT QTY	QTY	PART NUMBER	DESCRIPTION	MASS (lb)
1	1	1	200072823	Vault 5050x7 Slab Top 36"C Cast-In Cover Tacoma Power 64807	1343
2	1	1	200051352	Vault 5050x38 Rect. Bottom Section Knockout Sump Tacoma Power 21165	2967
3	1	1	200072819	Riser 5050x4 Tacoma Power 79987	406
4	1	1	200062521	Riser 5050x6 Tacoma Power 39972	614
5	1	1	200062525	Riser 5050x12 Tacoma Power 43254	1240

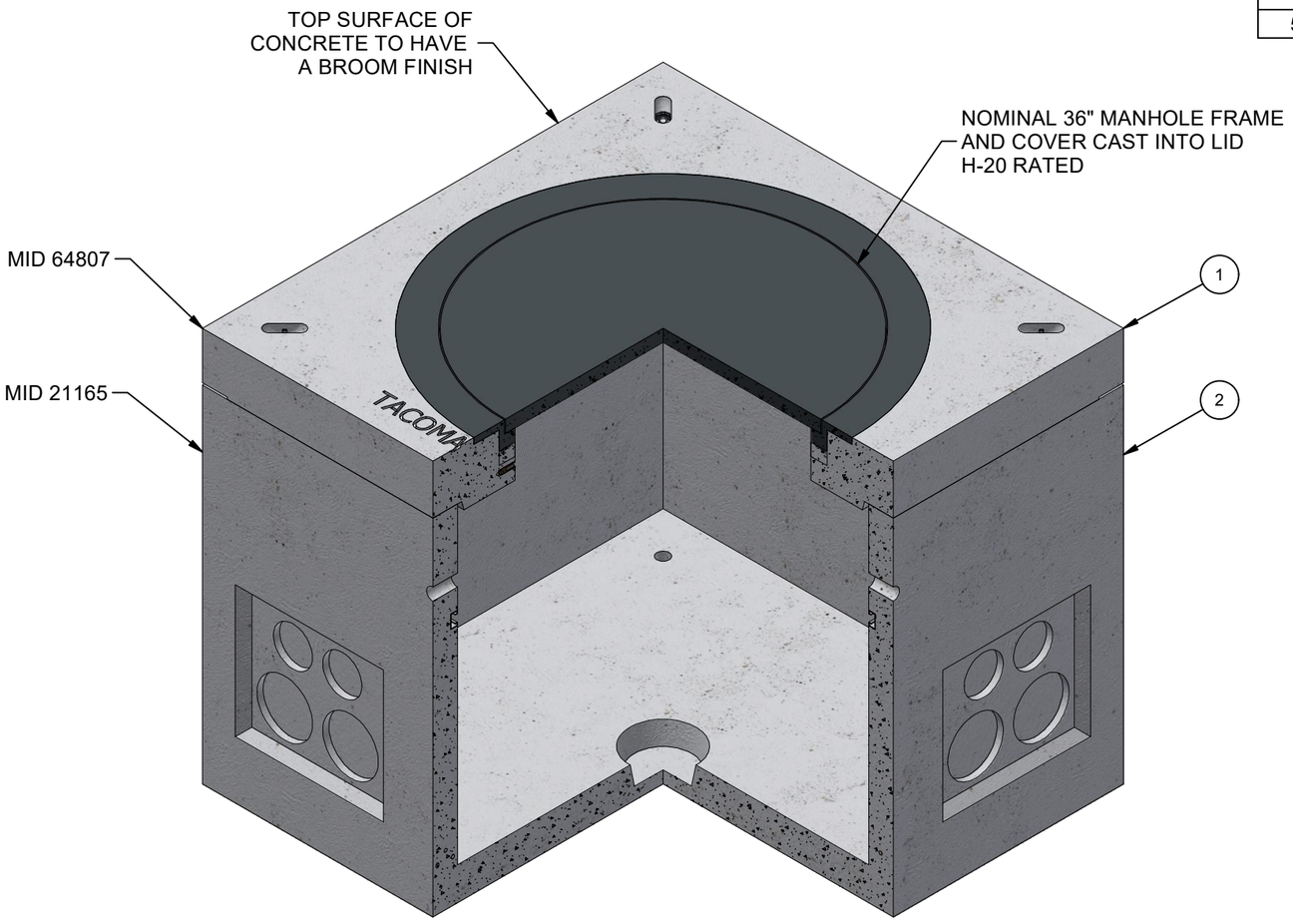

ISO LAYOUT

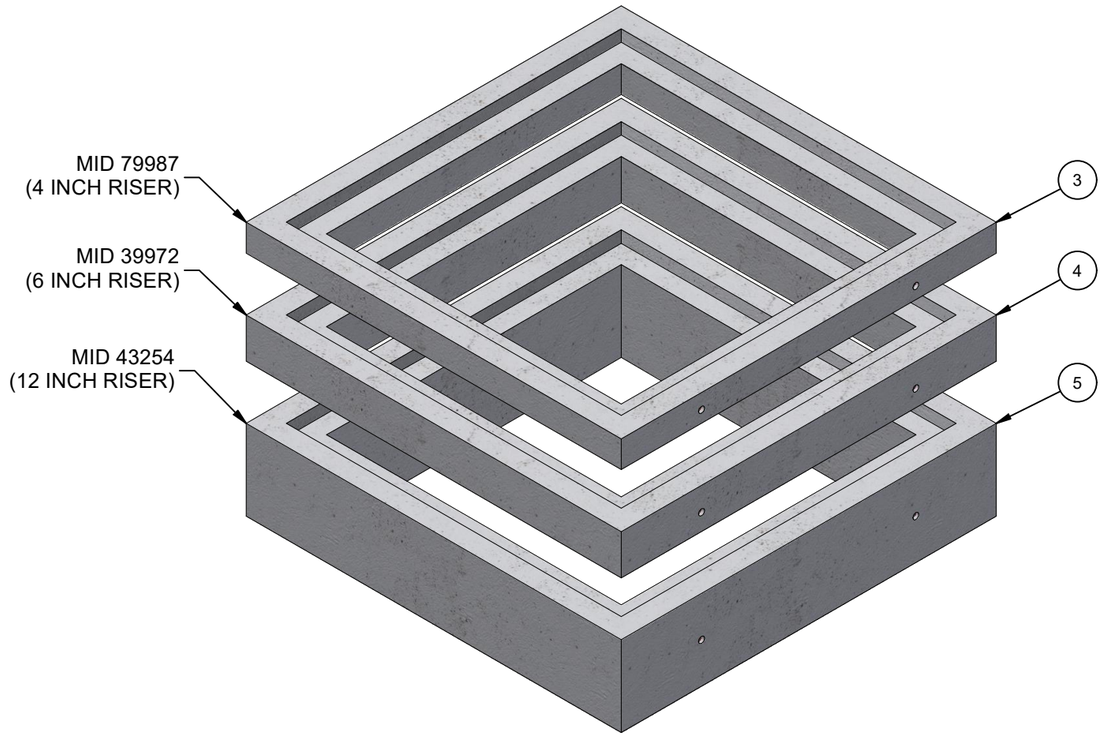

ISO LAYOUT
(SHOWING OPTIONAL RISERS AND COVERS)

CHANGE HISTORY			
NO.	DESCRIPTION	DATE	BY
1	DRAWING CREATED	2/21/2023	E.Fine
2	TOP SLAB REINFORCING PAGE ADDED	10/26/2023	ACHO
3	UPDATING LIFTERS	1/12/2024	E.Fine
4	COVER SLAB UPDATED	3/20/2024	E.Fine
5	UPDATED CONCRETE TEXTURE	3/30/2026	A.Viveiros

BURY DEPTH:	0.0' - 0.0' to Top		
WATER LEVEL:	3.0'	APPROX. WEIGHT:	6569.77 Lbs
DESIGN SPEC:	ACI 318,ASTM C857	LOADING SPEC:	A-16 (AASHTO HS20-44)
AGENCY:	Tacoma Power	AGENCY SPEC:	554

Infrastructure JENSEN
WWW.JENSENINFRASTRUCTURE.COM

©2026 Jensen Infrastructure - All rights reserved.
All materials appearing as Jensen Infrastructure documents and the like are proprietary work product and are protected under U.S. copyright and other laws.
Unless in conjunction with business conducted with Jensen Infrastructure, any use of Jensen Infrastructure work product without express, written consent is prohibited, and recipient is prohibited from distributing any and all work product to non-approved third parties under penalty of civil action.
This product shall only be produced in a Jensen Infrastructure facility.

DESCRIPTION:	Vault Layout 5050x37 Knockout Sump 36"C Tacoma Power 554 LAYOUT REVIEW		REV: D-1
PART NUMBER:	200072832	DRAWN BY:	E.Fine
CREATED:	2/21/2023	MODIFIED:	4/28/2026
			SHEET: 1 OF 2

200072832.idw

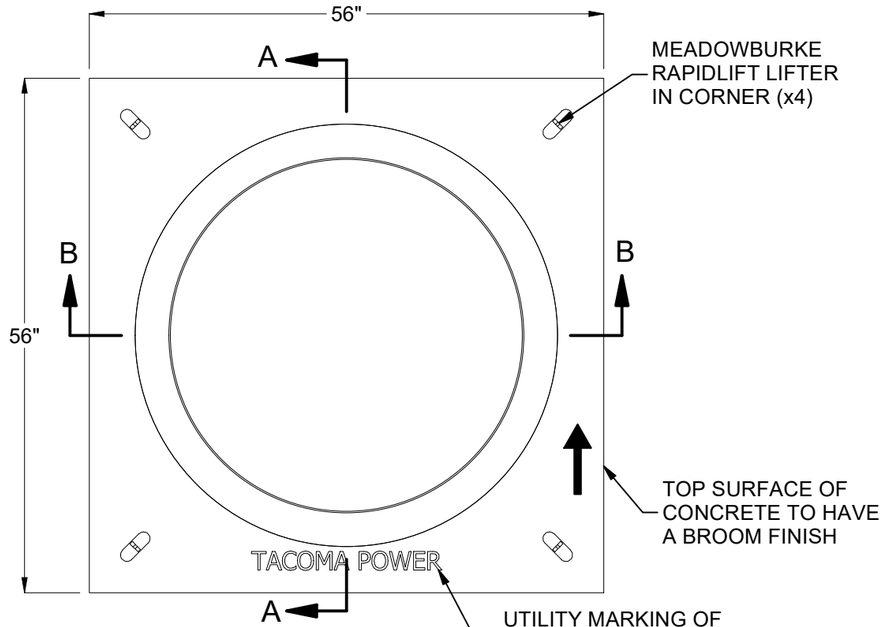

PLAN VIEW

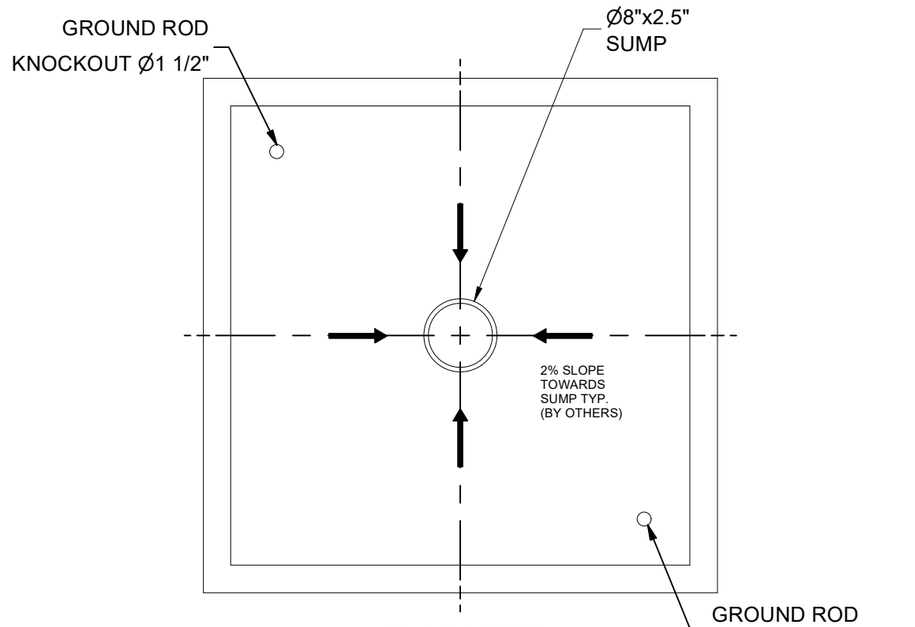

PLAN VIEW
(SHOWING INSIDE FLOOR)

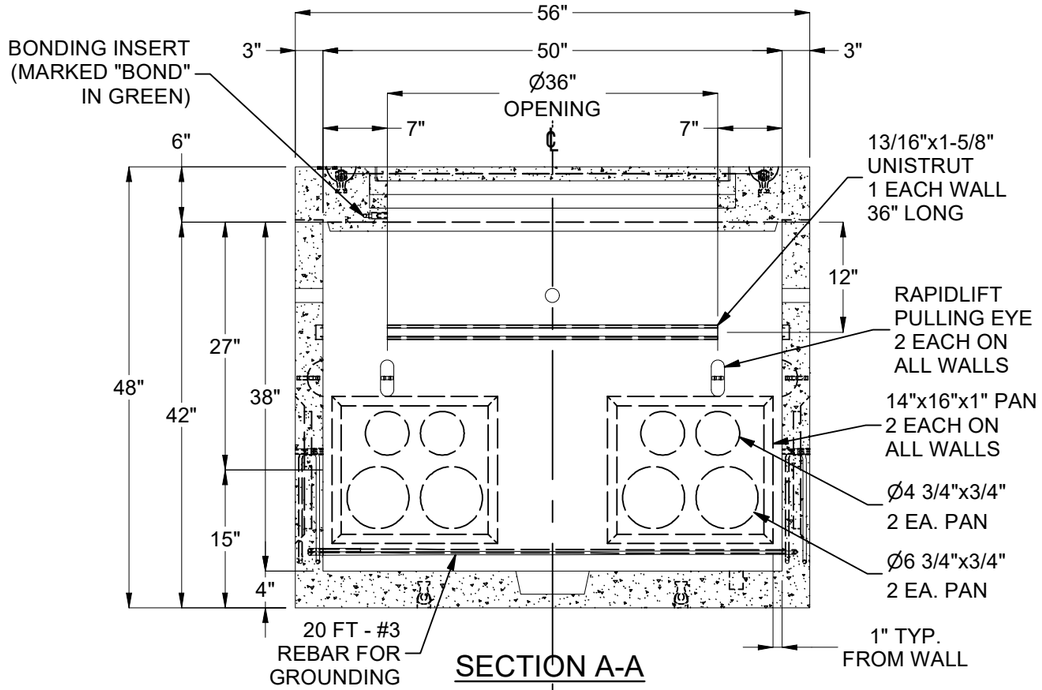

SECTION A-A

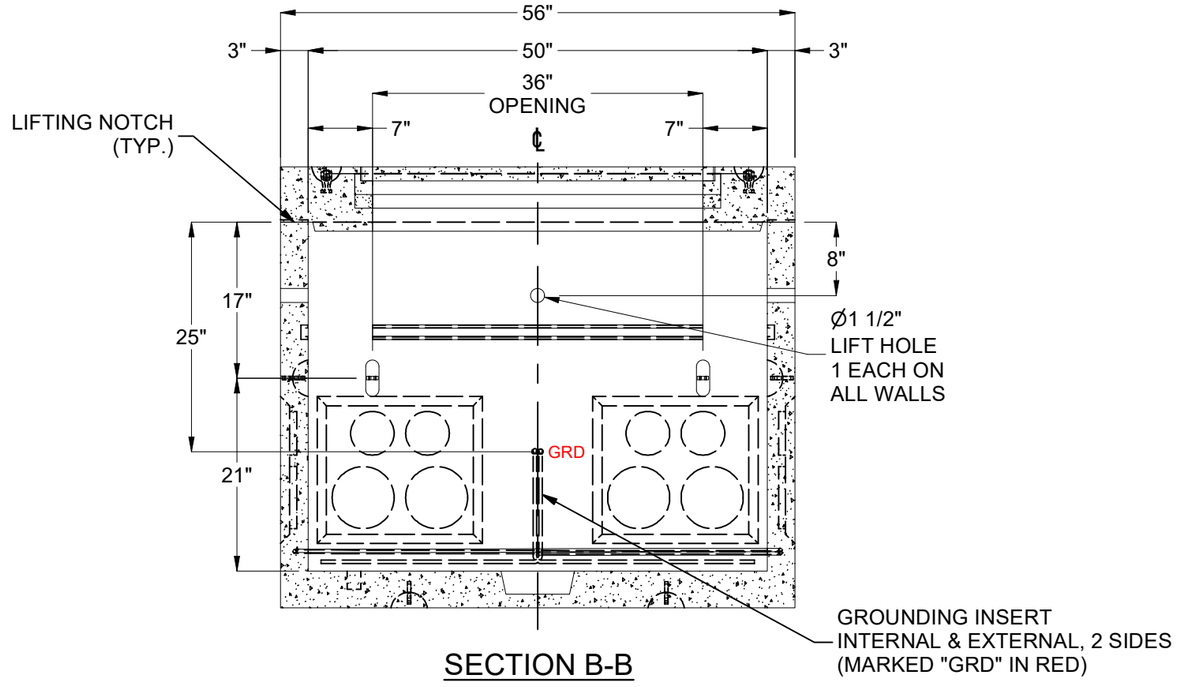

SECTION B-B

BURY DEPTH:	0.0' - 0.0' to Top		
WATER LEVEL:	3.0'	APPROX. WEIGHT:	6569.77 Lbs
DESIGN SPEC:	ACI 318,ASTM C857	LOADING SPEC:	A-16 (AASHTO HS20-44)
AGENCY:	Tacoma Power	AGENCY SPEC:	554

Infrastructure
JENSEN
WWW.JENSENINFRASTRUCTURE.COM

©2026 Jensen Infrastructure - All rights reserved.
All materials appearing as Jensen Infrastructure documents and the like are proprietary work product and are protected under U.S. copyright and other laws.
Unless in conjunction with business conducted with Jensen Infrastructure, any use of Jensen Infrastructure work product without express, written consent is prohibited, and recipient is prohibited from distributing any and all work product to non-approved third parties under penalty of civil action.
This product shall only be produced in a Jensen Infrastructure facility.

DESCRIPTION:	Vault Layout 5050x37 Knockout Sump 36"C Tacoma Power 554 LAYOUT DRAWING		REV: D-1
PART NUMBER:	200072832	DRAWN BY:	E.Fine
CREATED:	2/21/2023	MODIFIED:	4/28/2026
			SHEET: 2 OF 2

200072832.idw