NOTES
■ FOR COMPLETE DESIGN AND PRODUCT INFORMATION CONTACT JENSEN PRECAST.

BILL OF MATERIALS

ITEM	UNIT QTY	QTY	PART NUMBER	DESCRIPTION
1	7.540 ft^3	7.540 ft^3	100011429	CONCRETE MIX GENERIC 7000 PSI
2	1	4	100042227	ANCHOR RAPID LIFT TECH 2.5T CLUTCH 2.4375IN LONG MB RL-25 GALV
3	1	1	100044139	GROUND INSERT BOTTLE ROCKET 1/2-13 BRONZE w/ 90DEG 0.375x16" STEEL ROD
4	1	1	100041905	CI RINGCOVER 36DIA EJ 1581 ASTM A-48 CL35B 4-PH 4.5-FLANGE REVERSIBLE - TACOMA POWER
5	1	1	300153791	REINFORCING MAT 300153791

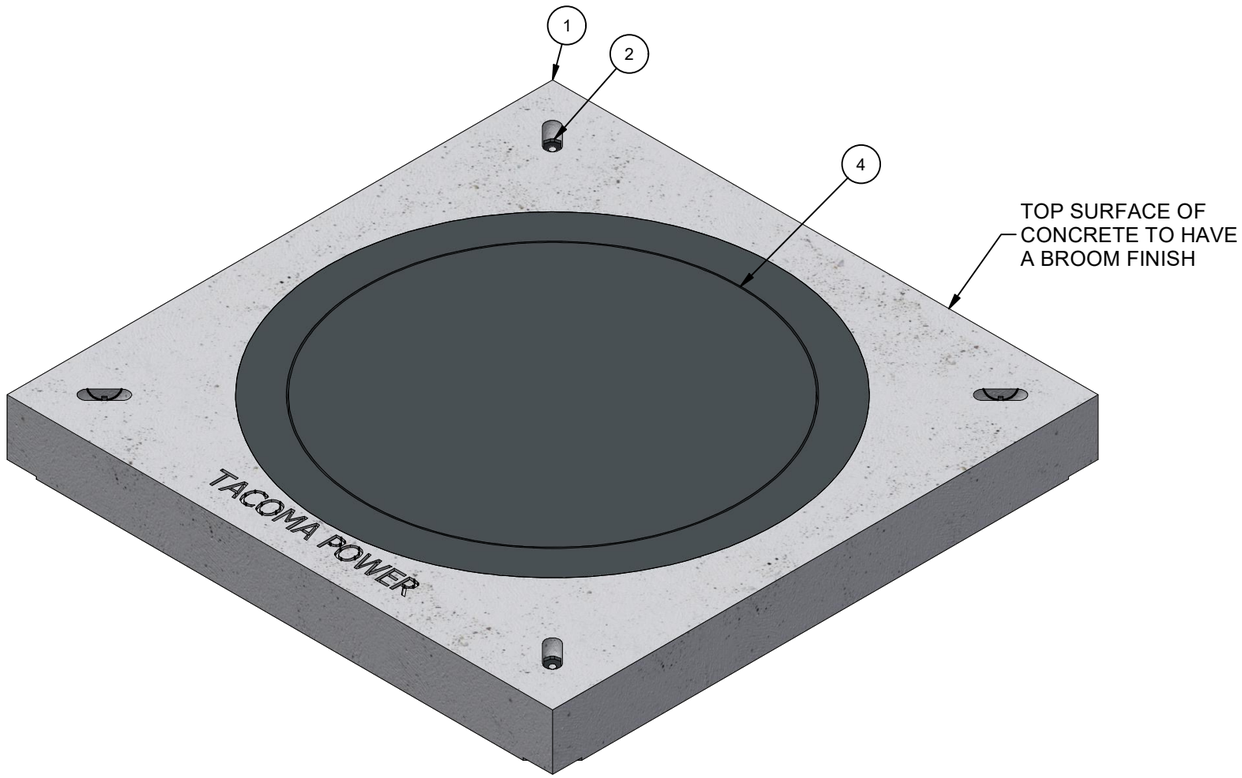

ISO LAYOUT

LIFTING NOTES
■ THIS CONCRETE PRODUCT IS DESIGNED TO BE LIFTED AT 2500 PSI WITH 4 LIFT CONNECTIONS EQUALLY LOADED TO 2 LIFTING POINTS AT A MINIMUM 60° SLING ANGLE, MEASURED FROM HORIZONTAL.
*All rigging shall be design by a qualified professional. Loading diagrams show illustrations of possible rigging setups to achieve the required sling angle and load leg equalization. Other valid rigging configurations are possible. A qualified professional must be consulted prior to lifting.

RIGGING DIAGRAM*	B

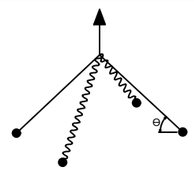

BURY DEPTH:	0.0' - 0.0' to Top		
WATER LEVEL:	3.0'	APPROX. WEIGHT:	1342.86 Lbs
DESIGN SPEC:	ACI 318,ASTM C857	LOADING SPEC:	A-16 (AASHTO HS20-44)
REINFORCEMENT TYPE:	Rebar	LIFTING TYPE:	Tech Erection Anchor

Infrastructure
JENSEN
WWW.JENSENINFRASTRUCTURE.COM

©2026 Jensen Infrastructure - All rights reserved.
All materials appearing as Jensen Infrastructure documents and the like are proprietary work product and are protected under U.S. copyright and other laws.
Unless in conjunction with business conducted with Jensen Infrastructure , any use of Jensen Infrastructure work product without express, written consent is prohibited, and recipient is prohibited from distributing any and all work product to non-approved third parties under penalty of civil action.
This product shall only be produced in a Jensen Infrastructure facility.

CHANGE HISTORY			
NO.	DESCRIPTION	DATE	BY
1	DRAWING CREATED	2/20/2023	E.Fine
2	REINFORCING DRAWINGS ADDED	10/26/2023	ACHO
3	LIFTERS UPDATED	1/14/2024	E.Fine
4	CONCRETE STRENGTH UPDATED	3/20/2024	E.Fine
5	UPDATED CONCRETE TEXTURE	3/30/2026	A.Viveiros

DESCRIPTION: Vault 5050x7 Slab Top 36"C Cast-In Cover Tacoma Power 64807 CASTING LAYOUT				REV: D-1
PART NUMBER:	200072823	DRAWN BY:	E.Fine	SHEET: 1 OF 2
CREATED:	2/20/2023	MODIFIED:	4/28/2026	

200072823.idw

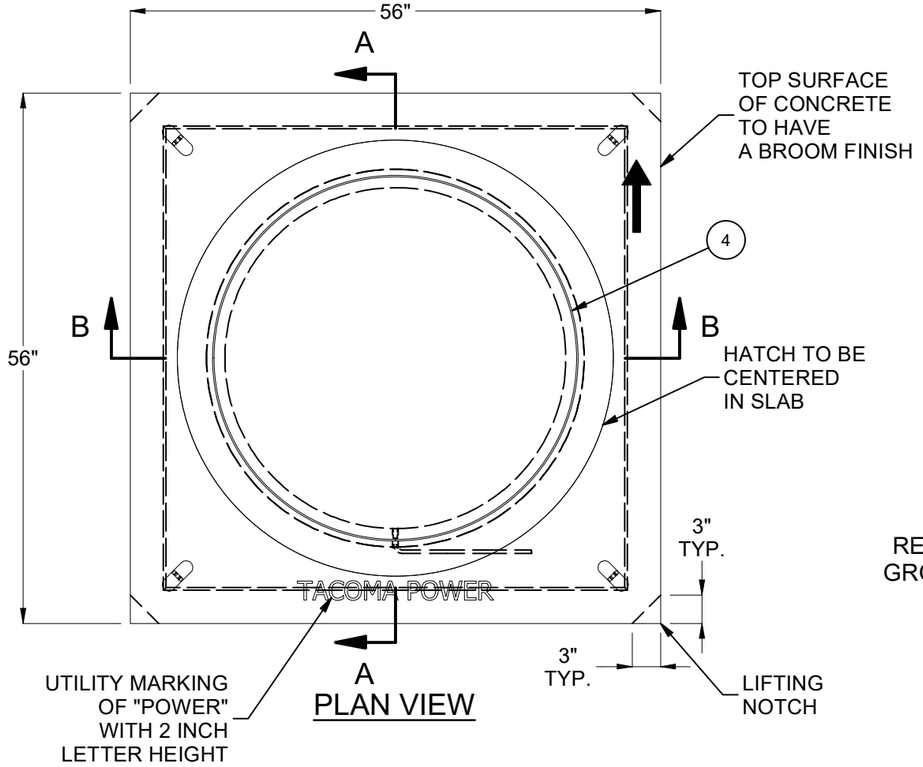

PLAN VIEW

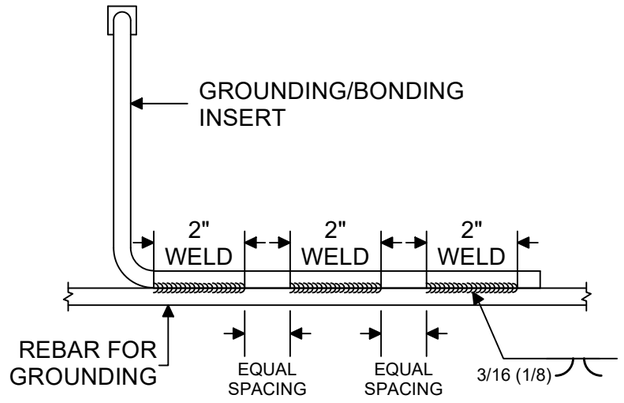

CONNECTION DETAIL

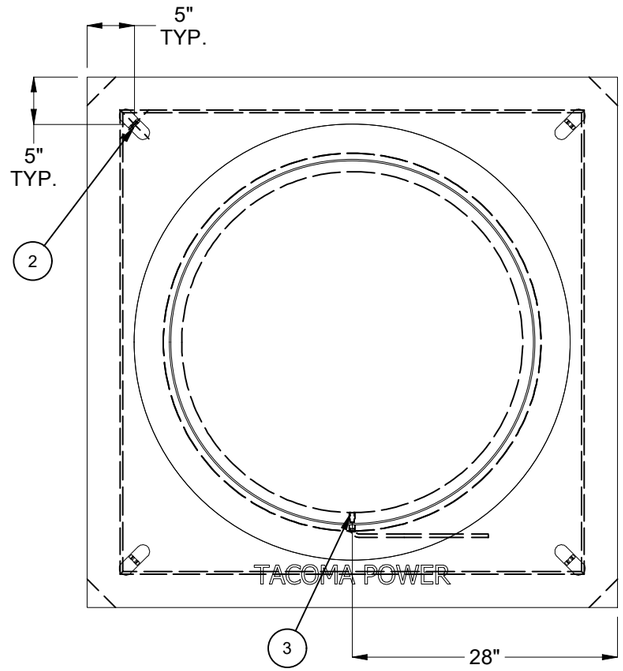

PLAN VIEW
(SHOWING OBJECT DIMENSIONS)

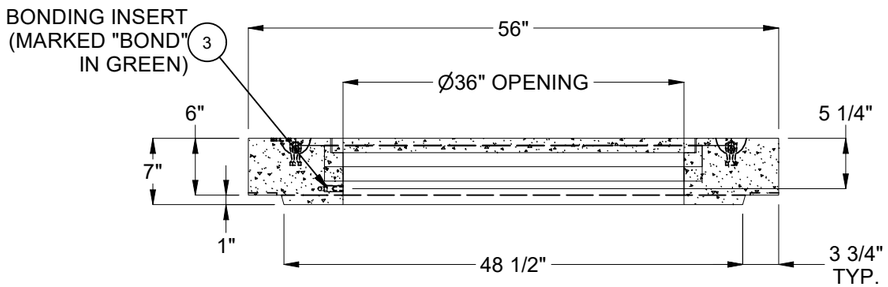

SECTION A-A

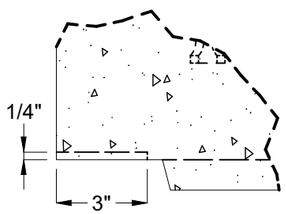

DETAIL LIFTING NOTCH

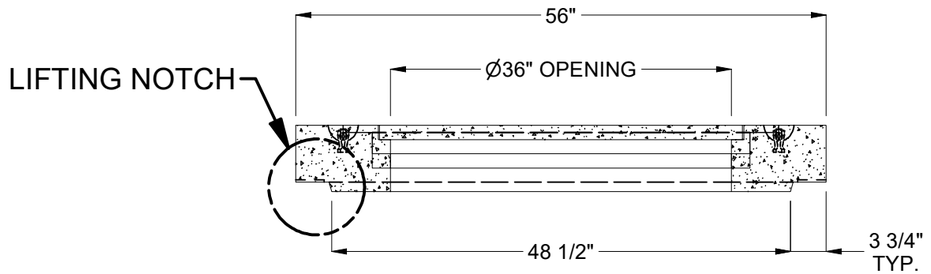

SECTION B-B

BURY DEPTH:	0.0' - 0.0' to Top		
WATER LEVEL:	3.0'	APPROX. WEIGHT:	1342.86 Lbs
DESIGN SPEC:	ACI 318,ASTM C857	LOADING SPEC:	A-16 (AASHTO HS20-44)
REINFORCEMENT TYPE:	Rebar	LIFTING TYPE:	Tech Erection Anchor

Infrastructure
JENSEN
WWW.JENSENINFRASTRUCTURE.COM

©2026 Jensen Infrastructure - All rights reserved.
All materials appearing as Jensen Infrastructure documents and the like are proprietary work product and are protected under U.S. copyright and other laws.
Unless in conjunction with business conducted with Jensen Infrastructure , any use of Jensen Infrastructure work product without express, written consent is prohibited, and recipient is prohibited from distributing any and all work product to non-approved third parties under penalty of civil action.
This product shall only be produced in a Jensen Infrastructure facility.

DESCRIPTION:	Vault 5050x7 Slab Top 36"C Cast-In Cover Tacoma Power 64807 CASTING DRAWING		REV: D-1
PART NUMBER:	200072823	DRAWN BY:	E.Fine
CREATED:	2/20/2023	MODIFIED:	4/28/2026
			SHEET: 2 OF 2

200072823.idw