DESIGN NOTES
■ FOR COMPLETE DESIGN AND PRODUCT INFORMATION CONTACT JENSEN PRECAST.

BILL OF MATERIALS

ITEM	UNIT QTY	QTY	PART NUMBER	DESCRIPTION
1	2.691 ft^3	2.691 ft^3	100011429	CONCRETE MIX GENERIC 7000 PSI
2	1	4	100035848	Insert Ferrule Loop 0.75 x 3.5" 304SS (F42 or Equiv.)
3	1	4	100032552	INSERT PLASTIC FERRULE CAP 3/4IN FC-17
4	1	1	200062522	REINFORCING MAT 200062522

200072819.idw

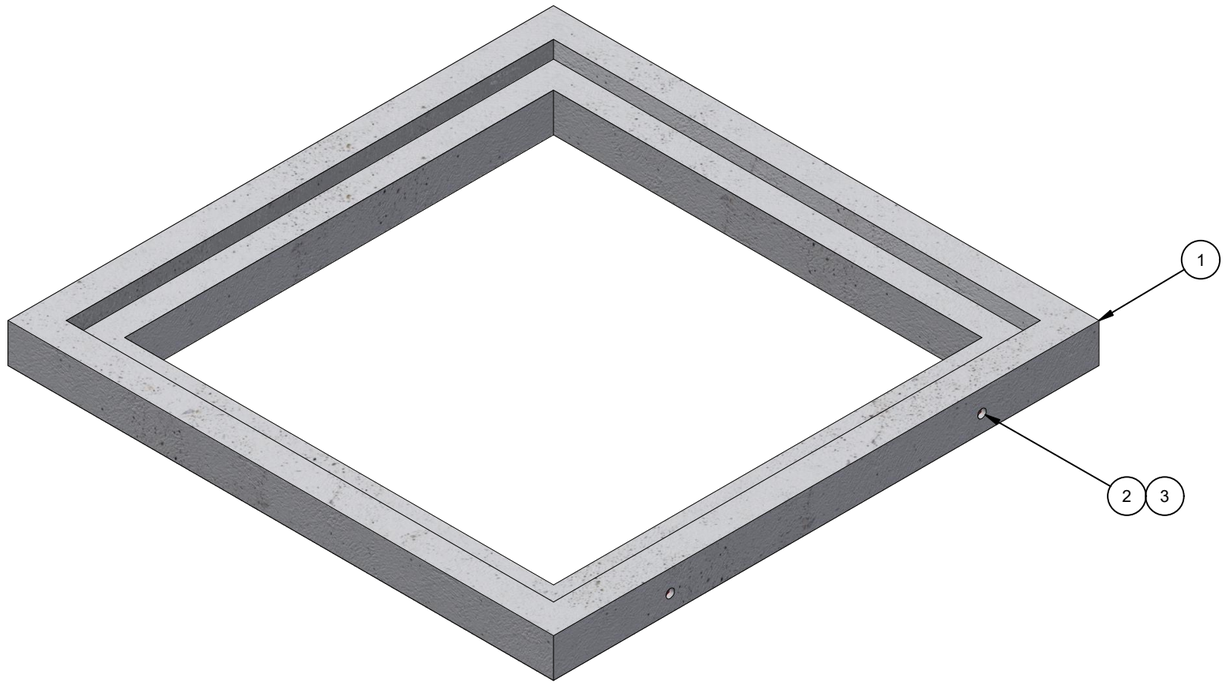

ISO LAYOUT

LIFTING NOTES
■ THIS CONCRETE PRODUCT IS DESIGNED TO BE LIFTED AT 2500 PSI WITH 4 LIFT CONNECTIONS EQUALLY LOADED TO 2 LIFTING POINTS AT A MINIMUM 60° SLING ANGLE, MEASURED FROM HORIZONTAL.
*All rigging shall be design by a qualified professional. Loading diagrams show illustrations of possible rigging setups to achieve the required sling angle and load leg equalization. Other valid rigging configurations are possible. A qualified professional must be consulted prior to lifting.

RIGGING DIAGRAM*	B

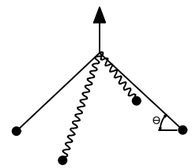

CHANGE HISTORY			
NO.	DESCRIPTION	DATE	BY
1	DRAWING CREATED	2/20/2023	E.Fine
2	LIFTERS UPDATED	1/31/2024	E.Fine
3	UPDATED CONCRETE TEXTURE	3/30/2026	A.Viveiros

BURY DEPTH:	0.5' - 5.2' to Top		
WATER LEVEL:	3.0'	APPROX. WEIGHT:	405.51 Lbs
DESIGN SPEC:	ACI 318,ASTM C857	LOADING SPEC:	A-16 (AASHTO HS20-44)
REINFORCEMENT TYPE:	Rebar	LIFTING TYPE:	Insert

Infrastructure
JENSEN
WWW.JENSENINFRASTRUCTURE.COM

©2026 Jensen Infrastructure - All rights reserved.
All materials appearing as Jensen Infrastructure documents and the like are proprietary work product and are protected under U.S. copyright and other laws.
Unless in conjunction with business conducted with Jensen Infrastructure , any use of Jensen Infrastructure work product without express, written consent is prohibited, and recipient is prohibited from distributing any and all work product to non-approved third parties under penalty of civil action.
This product shall only be produced in a Jensen Infrastructure facility.

DESCRIPTION:	Riser 5050x4 Tacoma Power 79987 CASTING LAYOUT		REV: B-4
PART NUMBER:	200072819	DRAWN BY:	E.Fine
CREATED:	2/20/2023	MODIFIED:	4/29/2026
			SHEET: 1 OF 2

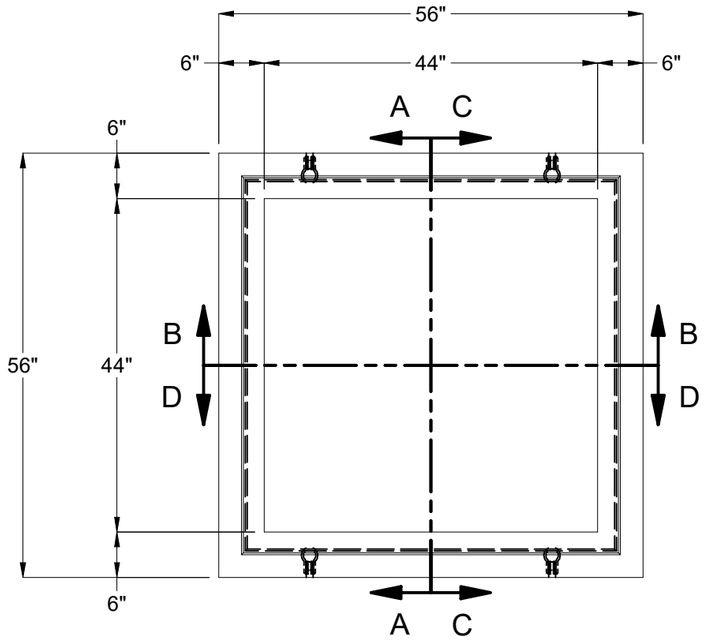

PLAN VIEW

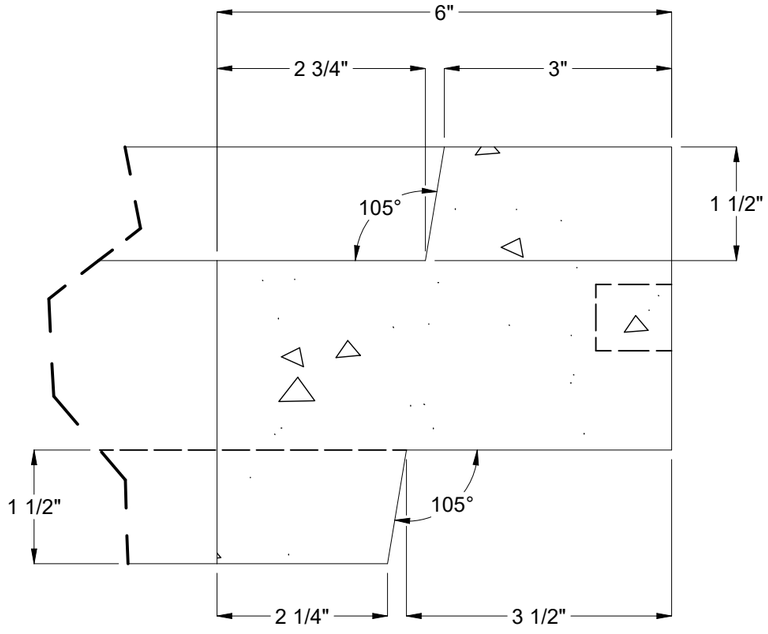

KEYWAY DETAIL
(INSERT TURNED OFF FOR CLARITY)

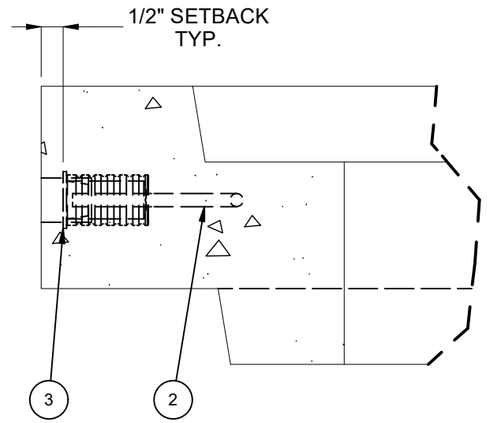

LIFTER DETAIL

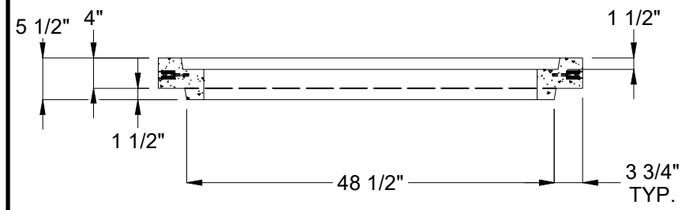

SECTION A-A

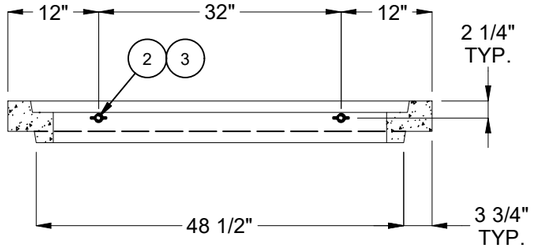

SECTION B-B

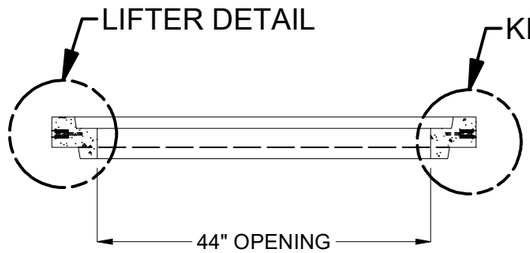

SECTION C-C



SECTION D-D

BURY DEPTH:	0.5' - 5.2' to Top		
WATER LEVEL:	3.0'	APPROX. WEIGHT:	405.51 Lbs
DESIGN SPEC:	ACI 318,ASTM C857	LOADING SPEC:	A-16 (AASHTO HS20-44)
REINFORCEMENT TYPE:	Rebar	LIFTING TYPE:	Insert

Infrastructure
JENSEN
WWW.JENSENINFRASTRUCTURE.COM

©2026 Jensen Infrastructure - All rights reserved.
All materials appearing as Jensen Infrastructure documents and the like are proprietary work product and are protected under U.S. copyright and other laws.
Unless in conjunction with business conducted with Jensen Infrastructure , any use of Jensen Infrastructure work product without express, written consent is prohibited, and recipient is prohibited from distributing any and all work product to non-approved third parties under penalty of civil action.
This product shall only be produced in a Jensen Infrastructure facility.

DESCRIPTION:	Riser 5050x4 Tacoma Power 79987 CASTING DRAWING		REV: B-4
PART NUMBER:	200072819	DRAWN BY:	E.Fine
CREATED:	2/20/2023	MODIFIED:	4/29/2026
			SHEET: 2 OF 2

200072819.idw