NOTES
■ FOR COMPLETE DESIGN AND PRODUCT INFORMATION CONTACT JENSEN PRECAST.

BILL OF MATERIALS

ITEM	QTY	PART NUMBER	DESCRIPTION	MASS
1	1	100001312	Vault 4878x60 Rect. Bottom Section Core Drill Sump TMWA 557 Ext. Coating - BG2000 Waterproofing Multicoat	8478.765 lbmass
2	1	100037730	COVER 4777 ALUM THS 1000180418 USF-HATCH	426.000 lbmass
3	2	200029391	BOLT ON LADDER LOOP ALUMINUM	0.260 lbmass
4	1	100042381	LADDER HOOKED 12FT GALV W/ FEET 99Z-3800K-12-SP INWESCO	61.598 lbmass
5	1	100005651	LADDER UP SAFETY POST LU-1	16.904 lbmass

200072785.idw

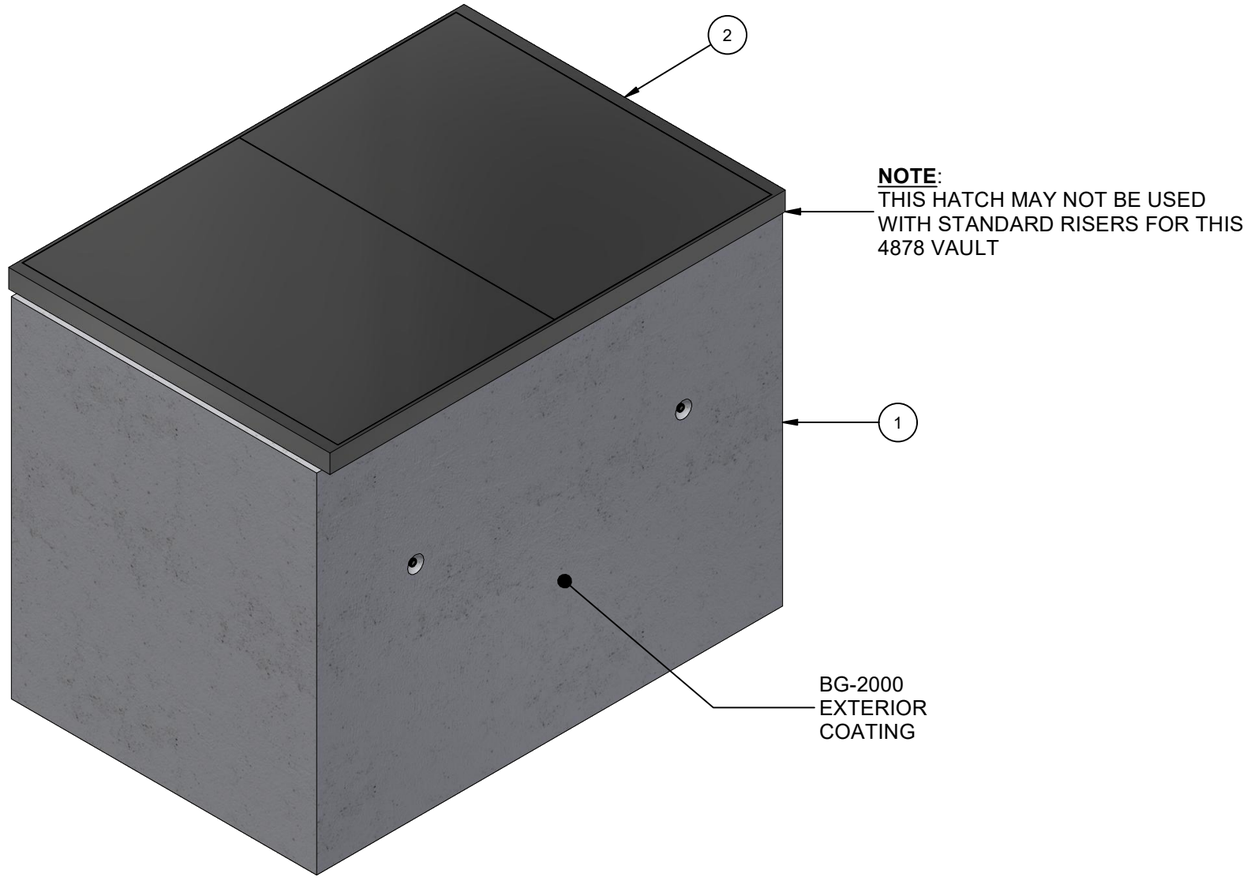

ISO VIEW

CHANGE HISTORY			
NO.	DESCRIPTION	DATE	BY
1	PRELIMINARY SUBMITTAL - 2302-54881-4	2/23/2023	EDC
2	UPDATED LADDER AND BG2000 PART No.	8/21/2023	EDC
3			

BURY DEPTH:	0.0' - 0.0' to Top		
WATER LEVEL:	Below Structure	APPROX. WEIGHT:	8976.14 Lbs
DESIGN SPEC:	ACI 318,ASTM C857	LOADING SPEC:	A-16 (AASHTO HS20-44)
AGENCY:	TMWA	AGENCY SPEC:	

JENSEN PRECAST EST. 1968

WWW.JENSENPRECAST.COM

©2023 Jensen Precast- All rights reserved.
All materials appearing as Jensen Precast documents and the like are proprietary work product and are protected under U.S. copyright and other laws.
Unless in conjunction with business conducted with Jensen Precast, any use of Jensen Precast work product without express, written consent is prohibited, and recipient is prohibited from distributing any and all work product to non-approved third parties under penalty of civil action.

DESCRIPTION: Vault 4878x60 Layout Assembly 47"x77"C TMWA Ext. Coating - Multicoat BG2000 CASTING LAYOUT				REV: B-3
PART NUMBER:	200072785	DRAWN BY:	E CAMERON	SHEET: 1 OF 2
CREATED:	2/17/2023	MODIFIED:	8/21/2023	

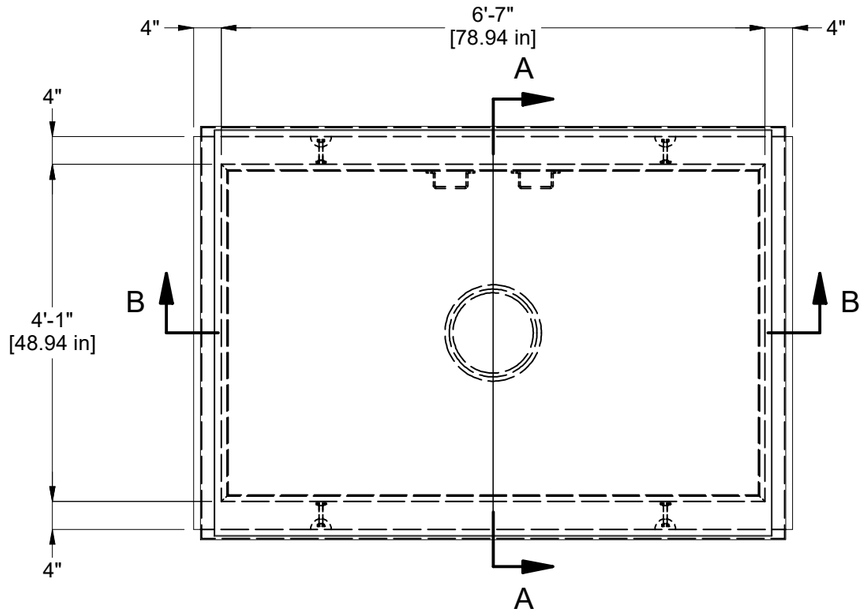

PLAN VIEW

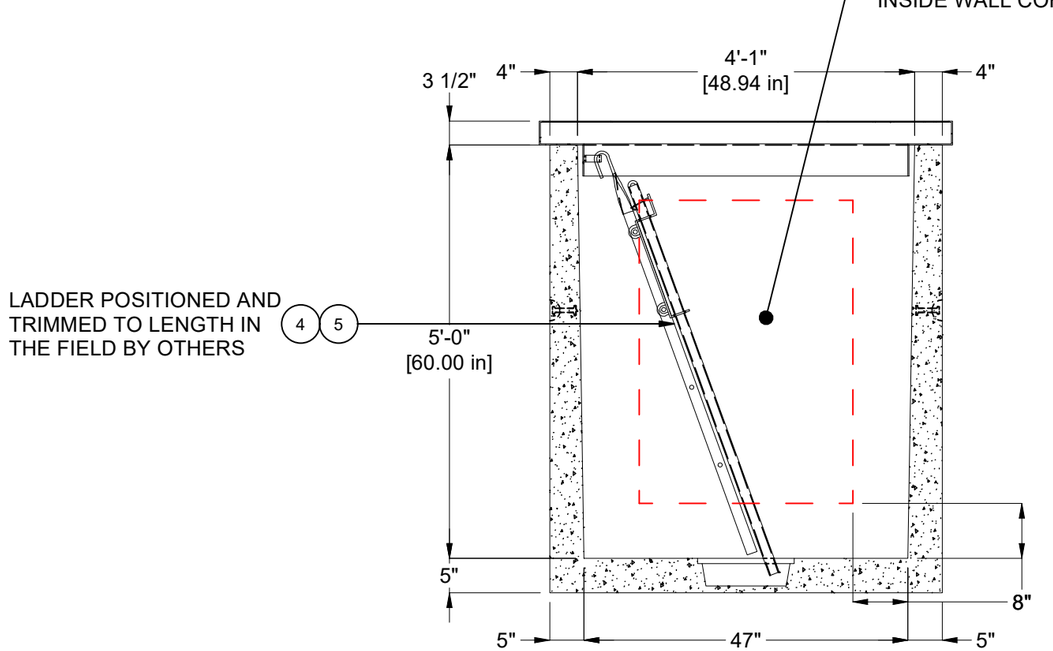

SECTION A-A

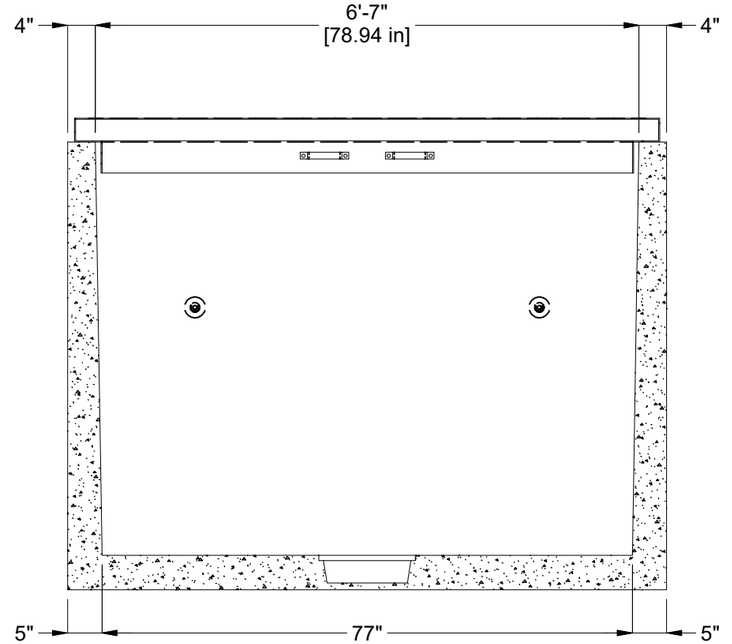

SECTION B-B

BURY DEPTH:	0.0' - 0.0' to Top		
WATER LEVEL:	Below Structure	APPROX. WEIGHT:	8976.14 Lbs
DESIGN SPEC:	ACI 318,ASTM C857	LOADING SPEC:	A-16 (AASHTO HS20-44)
AGENCY:	TMWA	AGENCY SPEC:	

JENSEN PRECAST EST. 1968

WWW.JENSENPRECAST.COM

©2023 Jensen Precast- All rights reserved.
All materials appearing as Jensen Precast documents and the like are proprietary work product and are protected under U.S. copyright and other laws.
Unless in conjunction with business conducted with Jensen Precast, any use of Jensen Precast work product without express, written consent is prohibited, and recipient is prohibited from distributing any and all work product to non-approved third parties under penalty of civil action.

DESCRIPTION:	Vault 4878x60 Layout Assembly 47"x77"C TMWA Ext. Coating - Multicoat BG2000		REV: B-3
	CASTING DRAWING		
PART NUMBER:	200072785	DRAWN BY:	E CAMERON
CREATED:	2/17/2023	MODIFIED:	8/21/2023

SHEET: 2 OF 2

200072785.idw