DESIGN NOTES
■ BASE SECTION DESIGED FOR A MAXIMUM OF 3'-1" OF EARTH COVER
■ CONFORMS TO CITY OF RENO STANDARD DETAILS FOR PUBLIC WORKS CONSTRUCTION - CATCH BASIN TYPE 3-R DATED 1/2023
■ FOR COMPLETE DESIGN AND PRODUCT INFORMATION CONTACT JENSEN PRECAST.

BILL OF MATERIALS

ITEM	QTY	PART NUMBER	DESCRIPTION	MASS
1	1	100001059	Drainage 2424x48 Rect. Bottom Section Knockout	2397.729 lbmass
2	1	100013824	CI GRATE FRAME 2626 NC-I-9226 ASTM A48 CL35B	5.298 lbmass
3	1	100013825	CI GRATE 2626 NC-I-9226 ASTM A48 CL35B TYPE 3R DI	27.613 lbmass
4	AS REQUIRED	100001067	Riser 2424x12 Rect. Riser	596.566 lbmass
5	AS REQUIRED	100001065	Riser 2424x6 Rect. Riser	293.911 lbmass

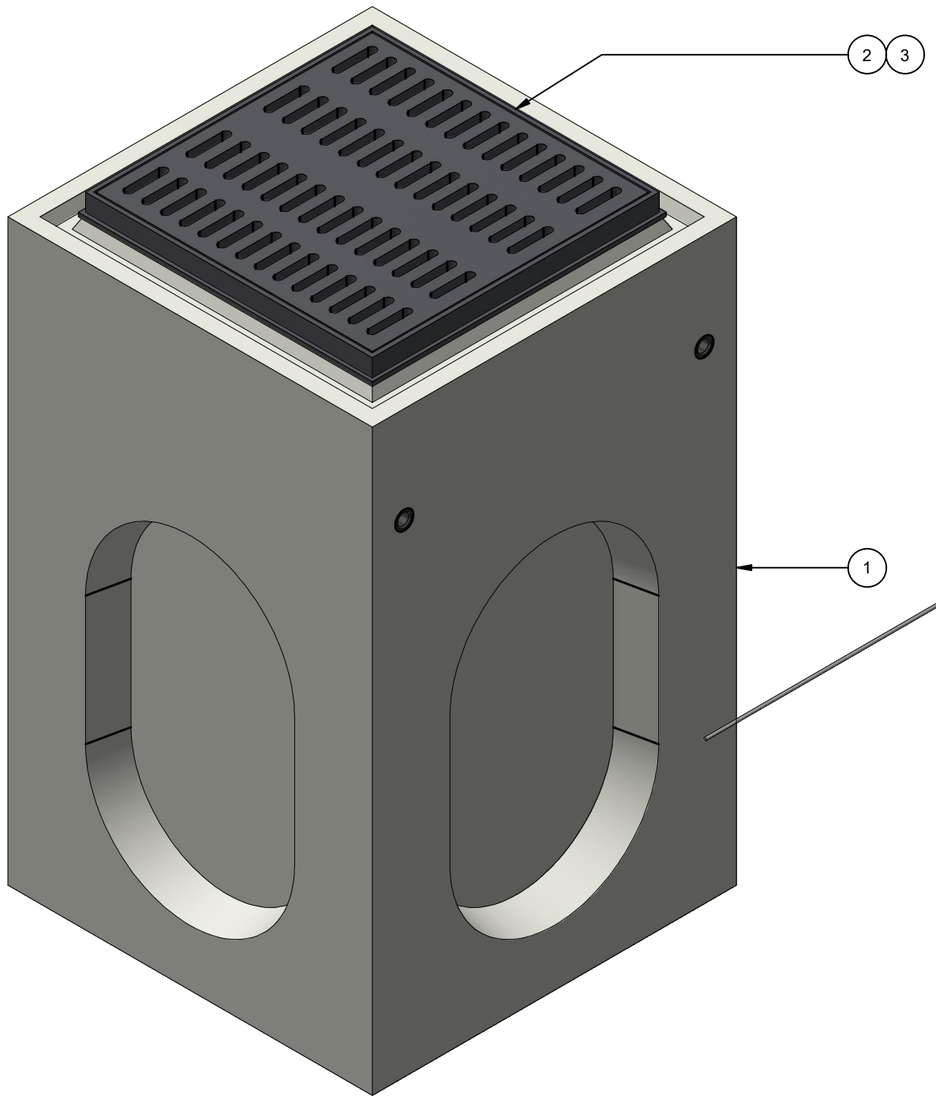

ISO VIEW

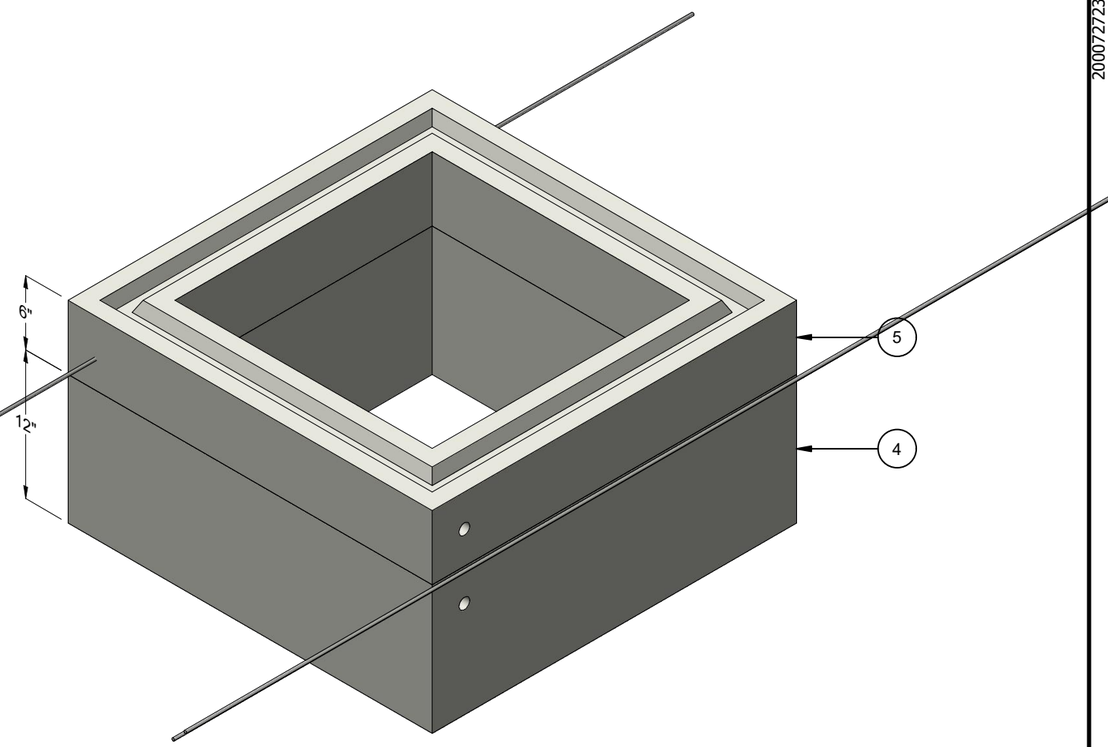

OPTIONAL RISERS

200072723.idw

CHANGE HISTORY

NO.	DESCRIPTION	DATE	BY
1	PRELIMINARY SUBMITTAL - 2302-54880-2	2/16/2023	EDC
2			
3			

BURY DEPTH:	0.0' - 2.1' to Top		
WATER LEVEL:	5.0'	APPROX. WEIGHT:	3321.12 Lbs
DESIGN SPEC:	ACI 318,ASTM C890	LOADING SPEC:	A-16 (AASHTO HS20-44)
AGENCY:	City of Reno	AGENCY SPEC:	Type 3-R

JENSEN PRECAST EST. 1968

WWW.JENSENPRECAST.COM

©2023 Jensen Precast- All rights reserved.
All materials appearing as Jensen Precast documents and the like are proprietary work product and are protected under U.S. copyright and other laws.
Unless in conjunction with business conducted with Jensen Precast, any use of Jensen Precast work product without express, written consent is prohibited, and recipient is prohibited from distributing any and all work product to non-approved third parties under penalty of civil action.

DESCRIPTION:	Drainage 2424 Layout Assembly City of Reno Type 3-R LAYOUT REVIEW		REV: A-3
PART NUMBER:	200072723	DRAWN BY:	E CAMERON
CREATED:	2/16/2023	MODIFIED:	2/16/2023
			SHEET: 1 OF 2

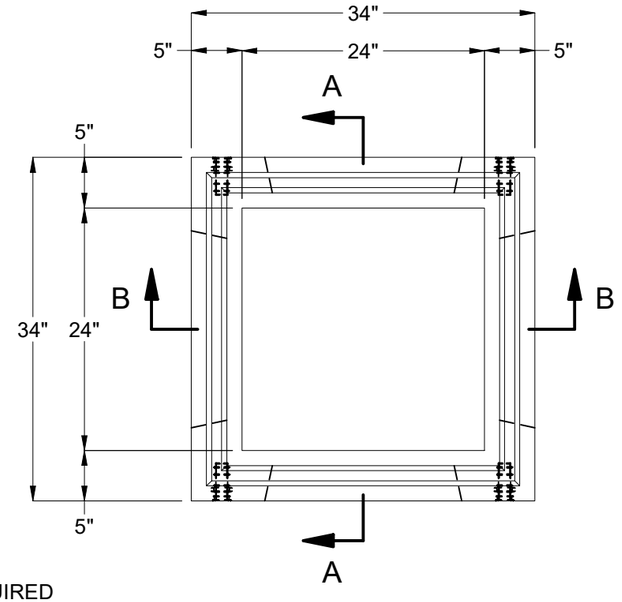

PLAN VIEW

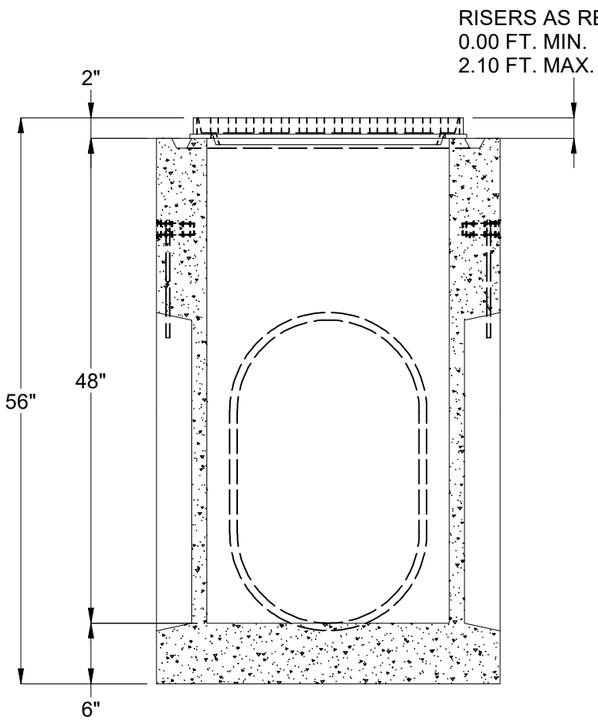

SECTION A-A

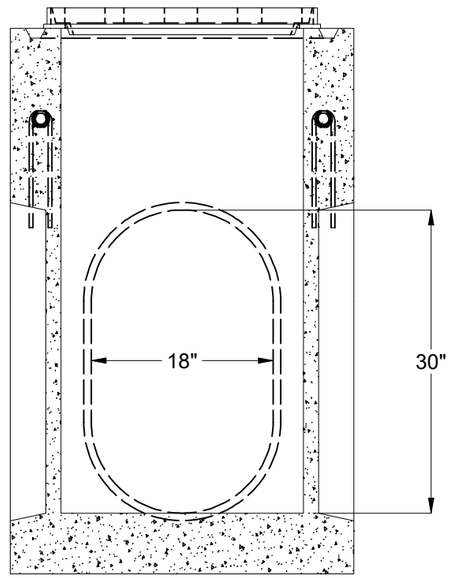

SECTION B-B
TYPICAL THINWALL
ALL FOUR SIDES

BURY DEPTH:	0.0' - 2.1' to Top		
WATER LEVEL:	5.0'	APPROX. WEIGHT:	3321.12 Lbs
DESIGN SPEC:	ACI 318,ASTM C890	LOADING SPEC:	A-16 (AASHTO HS20-44)
AGENCY:	City of Reno	AGENCY SPEC:	Type 3-R

JENSEN PRECAST EST. 1968

WWW.JENSENPRECAST.COM

©2023 Jensen Precast- All rights reserved.
All materials appearing as Jensen Precast documents and the like are proprietary work product and are protected under U.S. copyright and other laws.
Unless in conjunction with business conducted with Jensen Precast, any use of Jensen Precast work product without express, written consent is prohibited, and recipient is prohibited from distributing any and all work product to non-approved third parties under penalty of civil action.

DESCRIPTION:	Drainage 2424 Layout Assembly City of Reno Type 3-R LAYOUT DRAWING		REV: A-3
PART NUMBER:	200072723	DRAWN BY:	E CAMERON
CREATED:	2/16/2023	MODIFIED:	2/16/2023
			SHEET: 2 OF 2

200072723.idw