NOTES
■ FOR COMPLETE DESIGN AND PRODUCT INFORMATION CONTACT JENSEN PRECAST.

BILL OF MATERIALS

ITEM	QTY	PART NUMBER	DESCRIPTION
1	5.338 ft^3	100011427	CONCRETE MIX GENERIC 6000 PSI
2	1	200072337	WWR REINFORCING CAGE 200072337

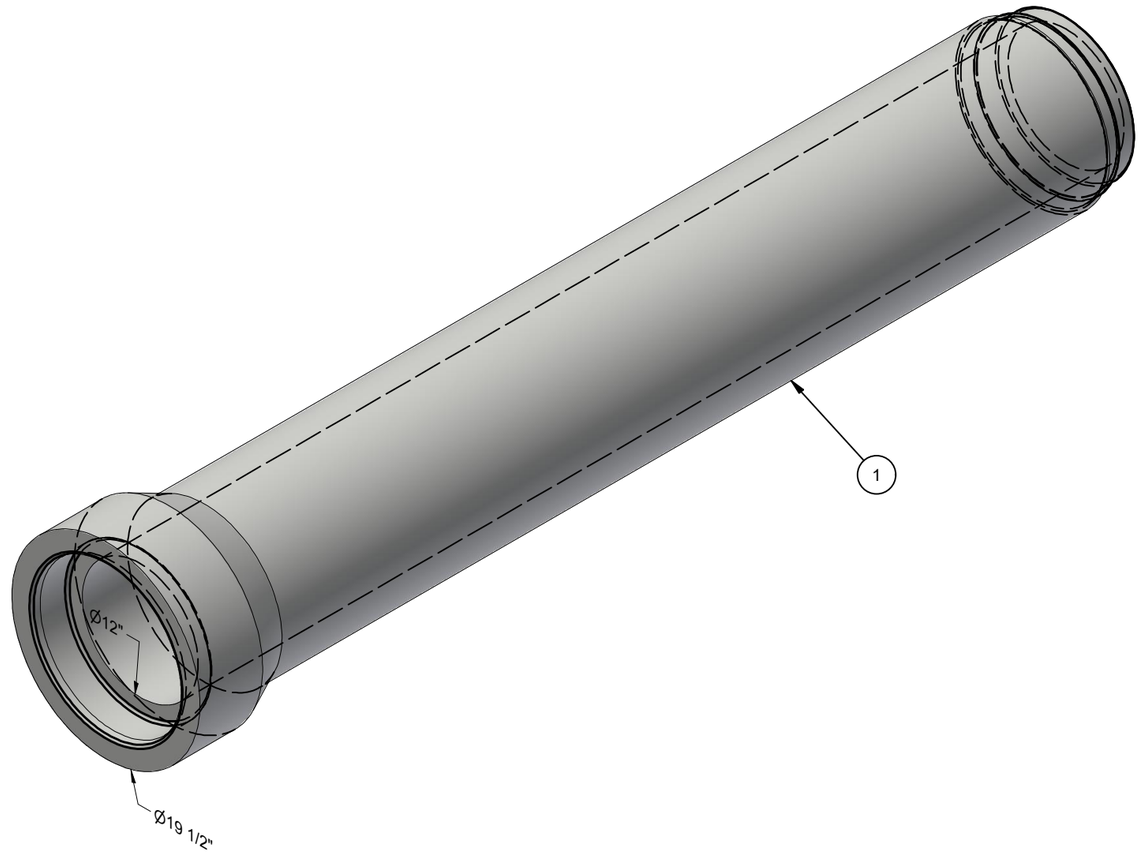

ISO REF

200072336.idw

CHANGE HISTORY			
NO.	DESCRIPTION	DATE	BY
1	2301-54769	1/30/2023	JW

BURY DEPTH:	to		
WATER LEVEL:		WEIGHT:	802.25 Lbs
DESIGN SPEC:	ASTM C76/AASHTO M170	LOADING SPEC:	Class 5
REINFORCEMENT TYPE:	Plain Wire	LIFTING TYPE:	Cable

JENSEN PRECAST EST. 1968

WWW.JENSENPRECAST.COM

©2023 Jensen Precast- All rights reserved.
All materials appearing as Jensen Precast documents and the like are proprietary work product and are protected under U.S. copyright and other laws.
Unless in conjunction with business conducted with Jensen Precast, any use of Jensen Precast work product without express, written consent is prohibited, and recipient is prohibited from distributing any and all work product to non-approved third parties under penalty of civil action.

DESCRIPTION:	RCP P12B Class 5 Bell - Spigot 96L		REV: A-1
PART NUMBER:	200072336	DRAWN BY:	J. Warren
CREATED:	11/9/2021	MODIFIED:	2/1/2023
			SHEET: 1 OF 2

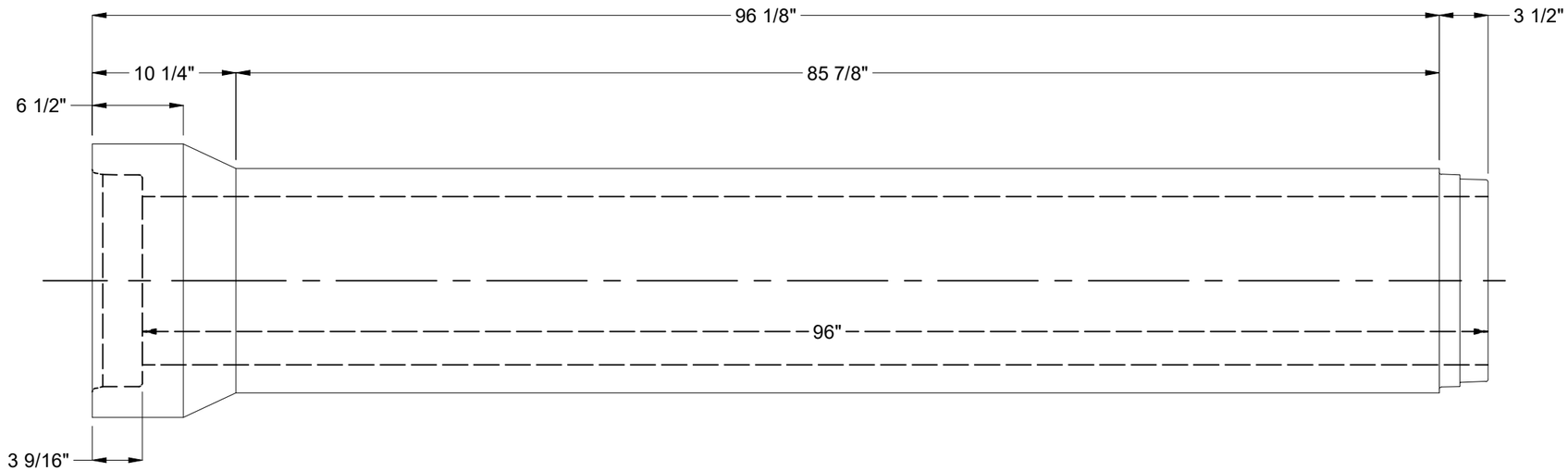

PLAN VIEW

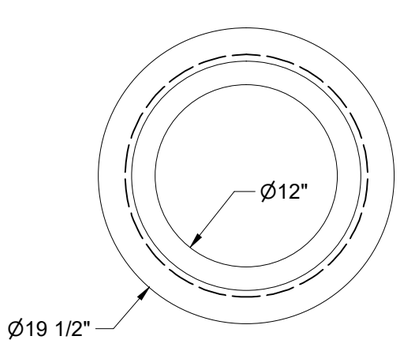

GROOVE END

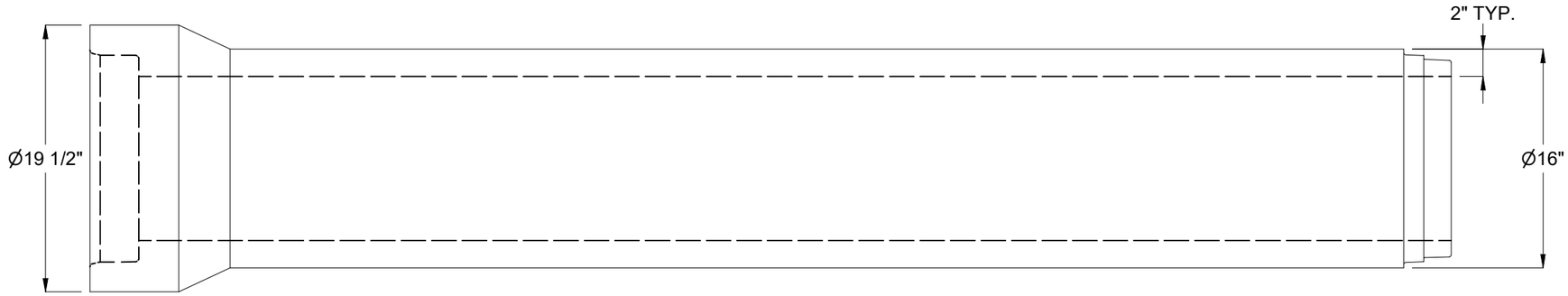

ELEVATION

BURY DEPTH:	to		
WATER LEVEL:		WEIGHT:	802.25 Lbs
DESIGN SPEC:	ASTM C76/AASHTO M170	LOADING SPEC:	Class 5
REINFORCEMENT TYPE:	Plain Wire	LIFTING TYPE:	Cable

JENSEN PRECAST EST. 1968

WWW.JENSENPRECAST.COM

©2023 Jensen Precast- All rights reserved.
All materials appearing as Jensen Precast documents and the like are proprietary work product and are protected under U.S. copyright and other laws.
Unless in conjunction with business conducted with Jensen Precast, any use of Jensen Precast work product without express, written consent is prohibited, and recipient is prohibited from distributing any and all work product to non-approved third parties under penalty of civil action.

DESCRIPTION:	RCP P12B Class 5 Bell - Spigot 96L		REV: A-1
PART NUMBER:	200072336	DRAWN BY:	J. Warren
CREATED:	11/9/2021	MODIFIED:	2/1/2023
			SHEET: 2 OF 2

200072336.idw